Tube-Line 5500

Parts & Service

Notes

Electric Solenoid valves can be manually operated by pushing a small punch into the end of spool and holding it in.

Caution Stay Away From Hoop When Engine Is Running

Inside of Control Panel , control relays are numbered CR1 to CR5 from left to right. Relay CR1 is wired to table trigger. CR1 will activate solenoid valve to extend ram cylinder. CR2 is wired to switch at the front slider, when ram is extended to this switch CR2 will close, energizing the wrap motor valve. Ram cylinder will extend and wrap motor will turn until ram comes in contact with slider switch at rear, then CR1 and CR2 will turn off and CR3 will turn on. Wrap motor will stop and ram cylinder will retract until ram cylinder trips limit switch at front end of table. All controls will then turn off. Testing can be done by pushing trigger plate and wait until machine goes through cycle, or you can push small square button on the front of relay 1 and let machine go through cycle.

When control relays are activated a small light goes on inside the relay.

When running machine through the cycle and wrapper motor or the cylinders do not work, check flowcontrol valve to see if flow is going to both motor and cylinder.

Engine is stopped by grounding ignition, in case of ignition failure make sure that stop switch wire is not grounded to frame and engine switch is not in stop position.

Steering is controlled by switch right/left on control panel through CR5 and CR6 activating coil A or B on steering solenoid valve.

TUBE-LINE 5500

Parts Manual

Index

Item	Page #
Hoop	1
Hoop Wheels and Axle	2
Wrapper Hardware	3
Hoop Brace	4
Right hand Safety Mesh	5
Left Hand Safety Mesh	6
Drive Wheel & Hydraulic Motor	7
Hubs	8
Front Steering Assy	9
Brakes	10
Rear Roller	11
Tail	12
Bale Saddle	13
Ram	14
Push off	15
Pushoff Channel	16
Tongue	17
Mud Flap	18
Hydraulic Tank and Filter	19
Engine and Hydraulic Pump	20
Engine Cover and Decal Plate	21
Hydraulic Valve (manual)	22
Hydraulic Valve (electric)	23
Limit Switch	24
Control Panel	25
Bale Trigger and Battery Holder	26
Throttle	27
Hydraulic Schematic Diagram (manual	28
Hydraulic Schematic Diagram (electric)	29
Electric Wiring Diagram	30
Electric Schematic Diagram (electric)	31
Sequence Of Operation (manual)	32
Sequence Of Operation (electric)	33
Part Number	

Tube-Line 550
Hoop

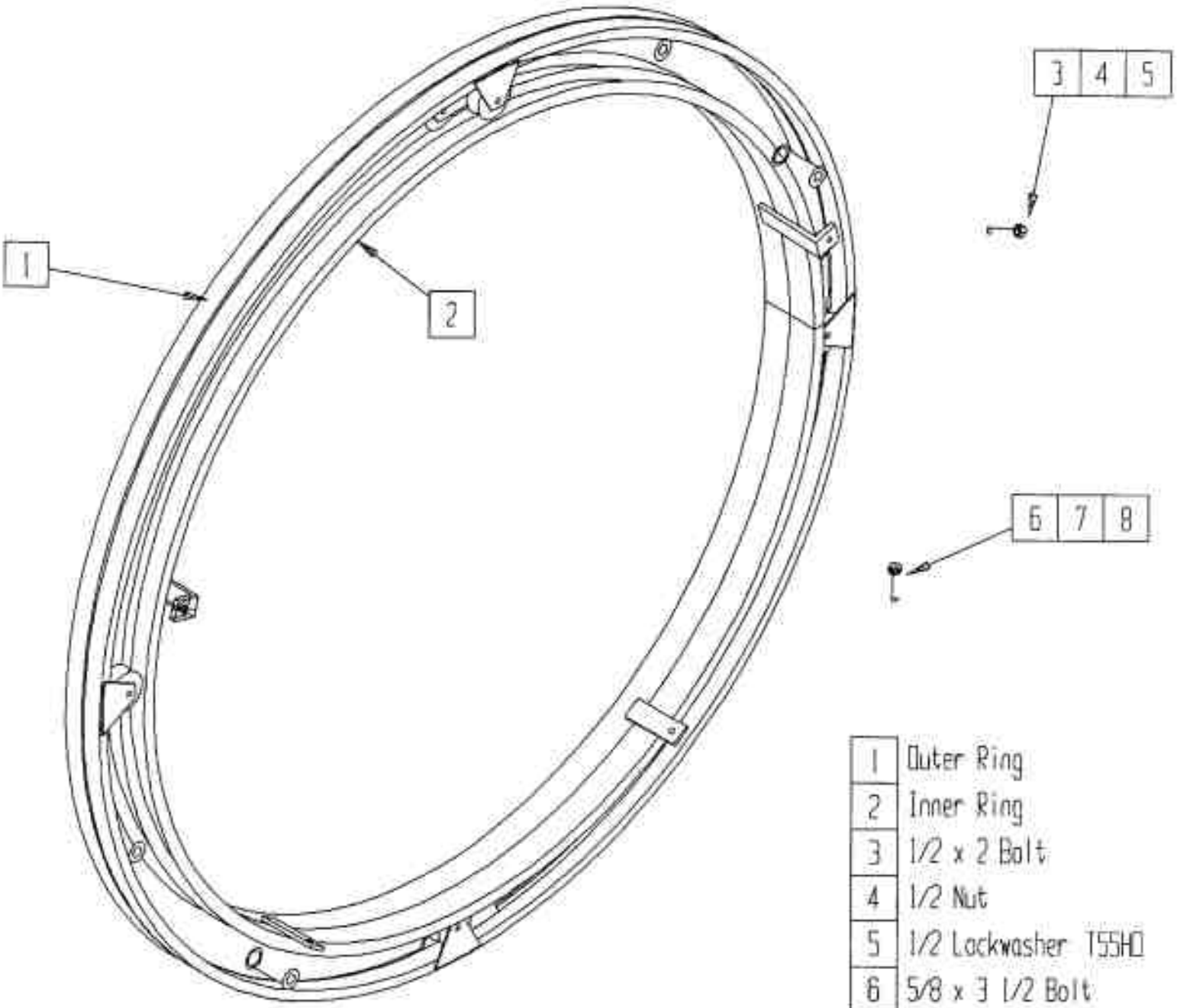

1	Outer Ring
2	Inner Ring
3	1/2 x 2 Bolt
4	1/2 Nut
5	1/2 Lockwasher T55HD
6	5/8 x 3 1/2 Bolt
7	5/8 Nut
8	5/8 Lockwasher

Tubeline 500
Hoop Wheels

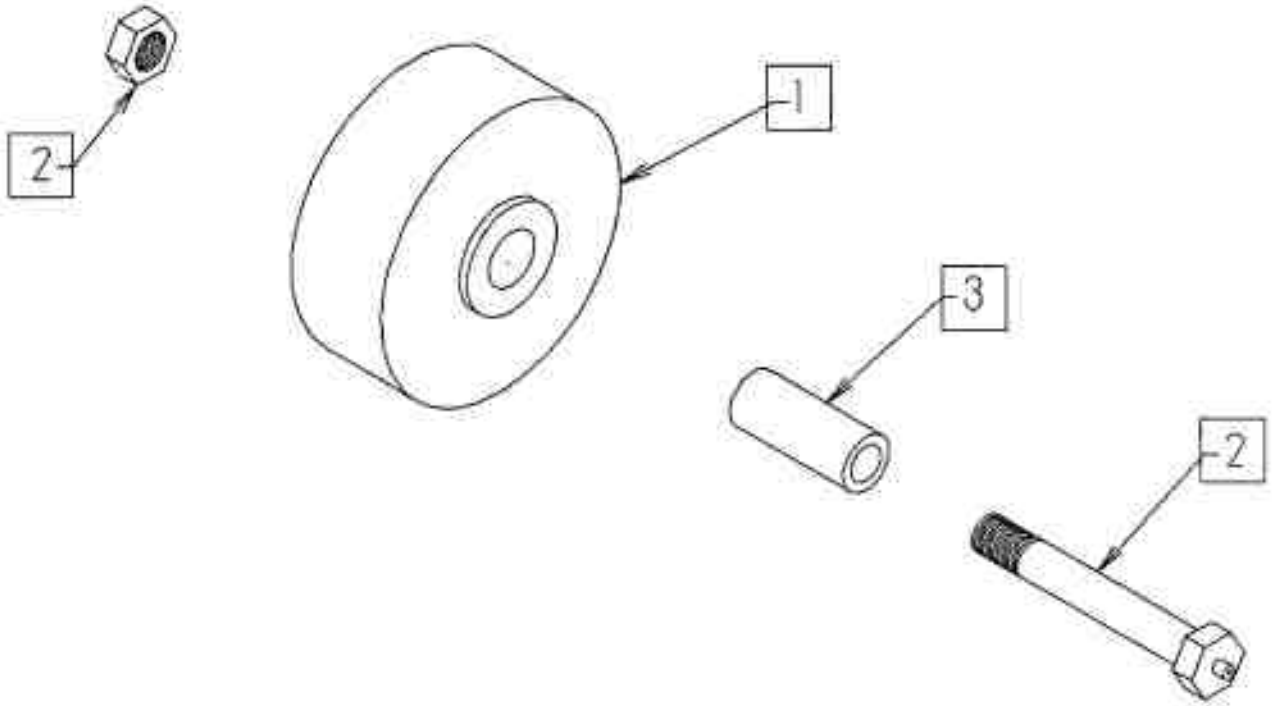

1	4 in Wheel
2	Axle Bolt / Locknut
3	Spanner

Tube - Line 5500/6500
Plastic Wrap Carrier

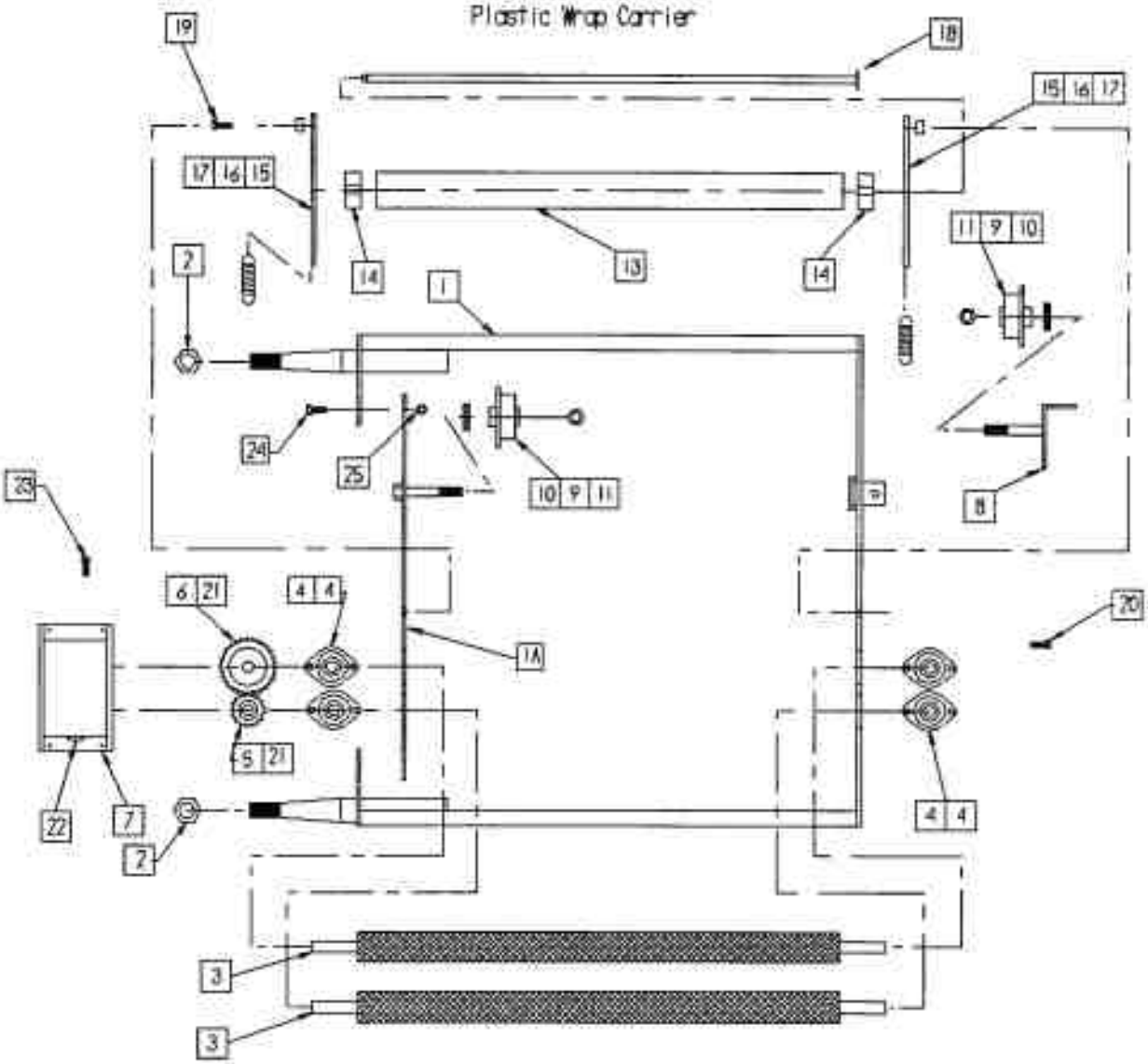

1	Main Wrap Bracket
1A	Main Wrap Side Insert
2	1-14 UNC Nut
3	Tensioner Roller
4	3/4 Bearing
5	Small Gear
6	Large Gear
7	Gear Cover
8	Spool Holder
9	Plastic Wrap Spool
10	5/8 Flat washer
11	5/8 Nylocknut
13	ABS Pipe
14	HMWPVC Bearing
15	ABS Bracket
16	Spacer
17	Spring
18	Axle Shaft
19	1/2 x 2 Bolt
20	5/16 Carriage Bolt
21	3/16 Keystock
22	Grease Fitting
23	10-24 x 3/4 Machine Bolt
24	3/8 x 1 #5 Bolt
25	3/8 Locknut

TubeLine 699
Hoop Brace Assy.

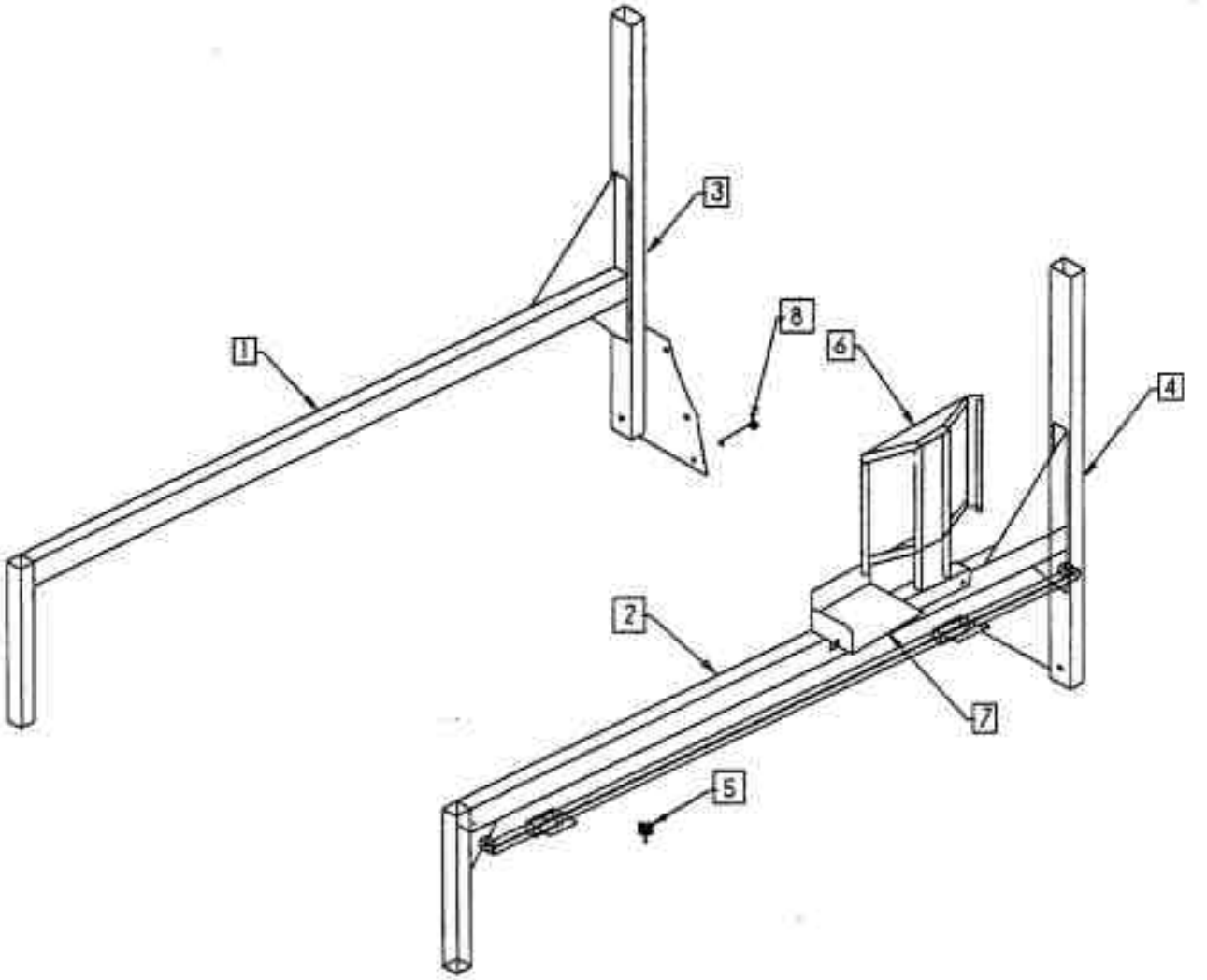

1. Right Hand Hoop Brace
2. Left Hand Hoop Brace
3. Right Hand Hoop Post
4. Left Hand Hoop Post
5. Switch Adjuster Screw
6. Automatic Control Panel Mount
7. Manual Control Mount
8. 1/2 x 4 1/2 Bolt

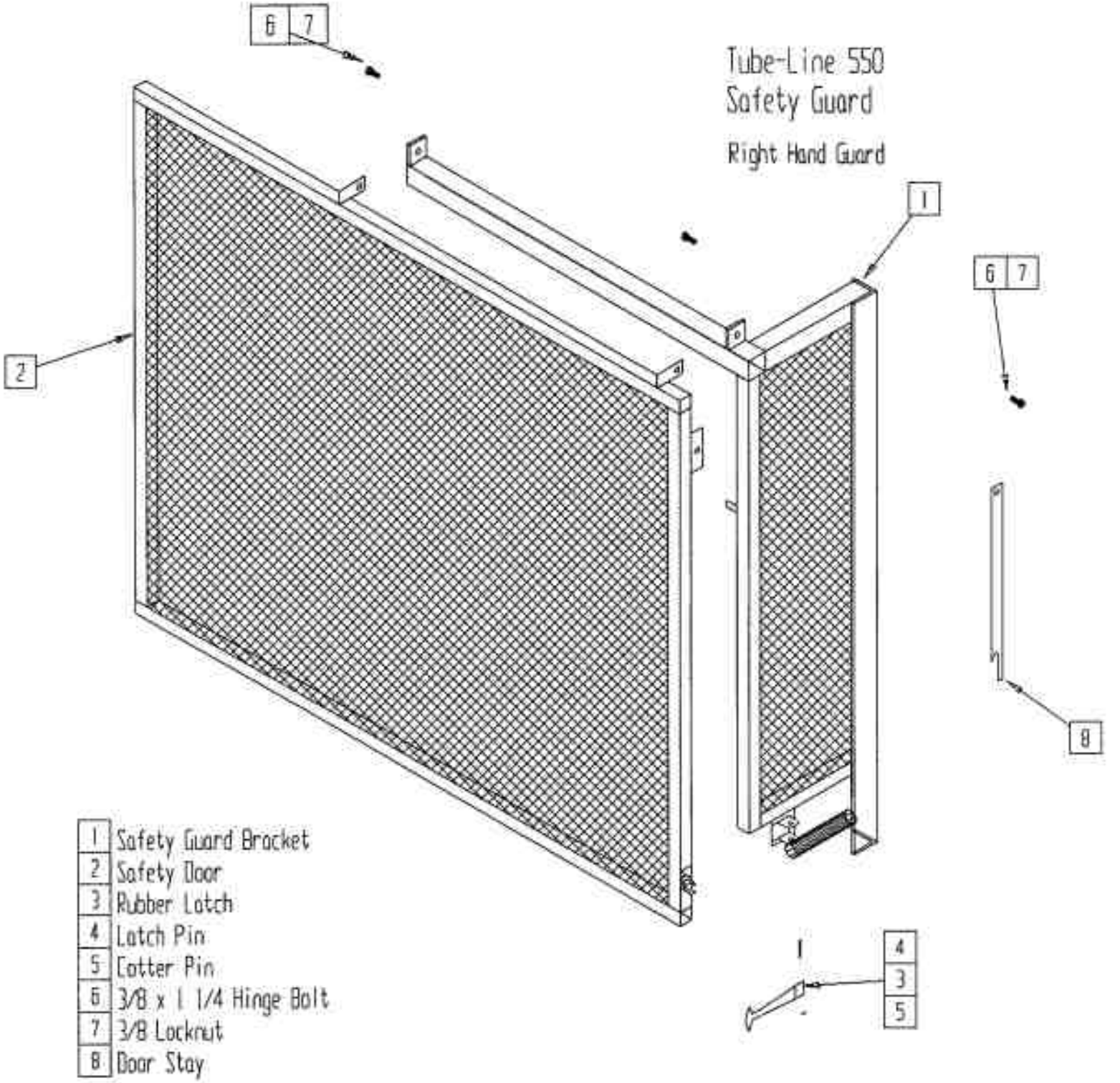

1	Safety Guard Bracket
2	Safety Door
3	Rubber Latch
4	Latch Pin
5	Cotter Pin
6	3/8 x 1 1/4 Hinge Bolt
7	3/8 Locknut
8	Door Stay

Tubeline 5500
Left Hand Saftey Guard

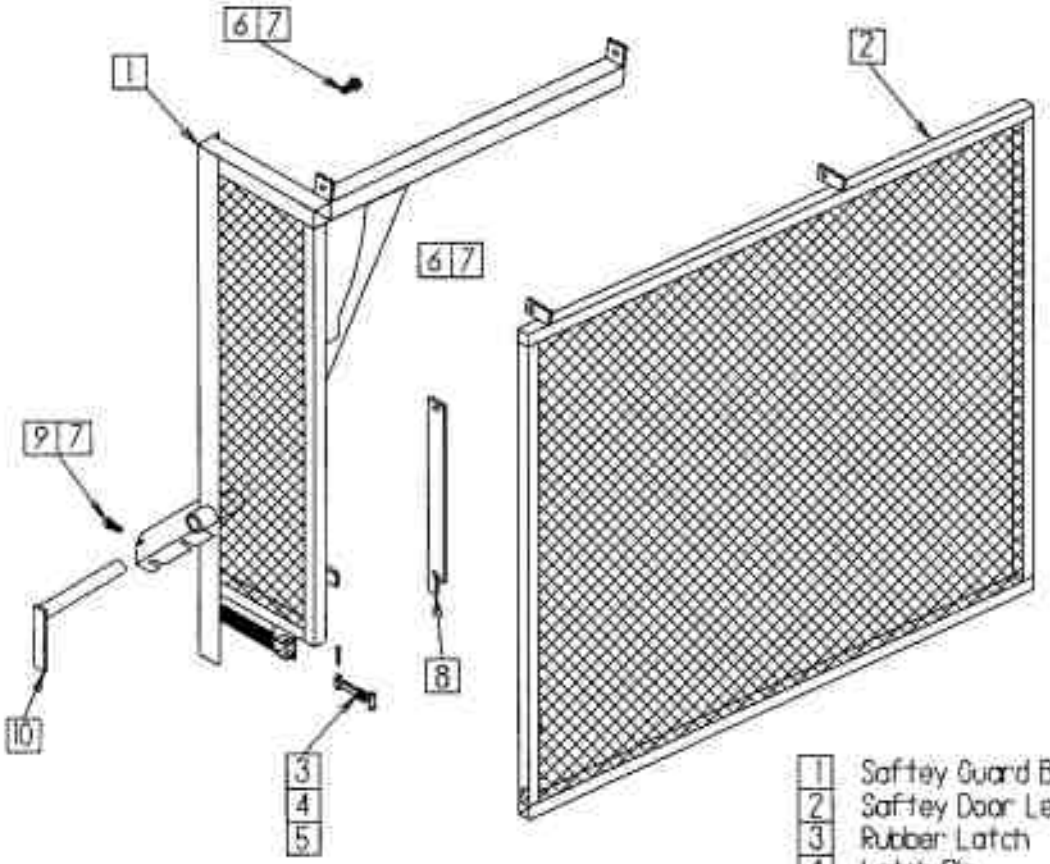

1	Saftey Guard Bracket Left Side
2	Saftey Door Left Side
3	Rubber Latch
4	Latch Pin
5	Cotter Pin
6	3/8 x 1 1/4 Hinge Bolt
7	3/8 Locknut
8	Door Stay
9	3/8 x 1 Bolt
10	Hoop Lock Pin

Tubeline 5500
Drive Wheel

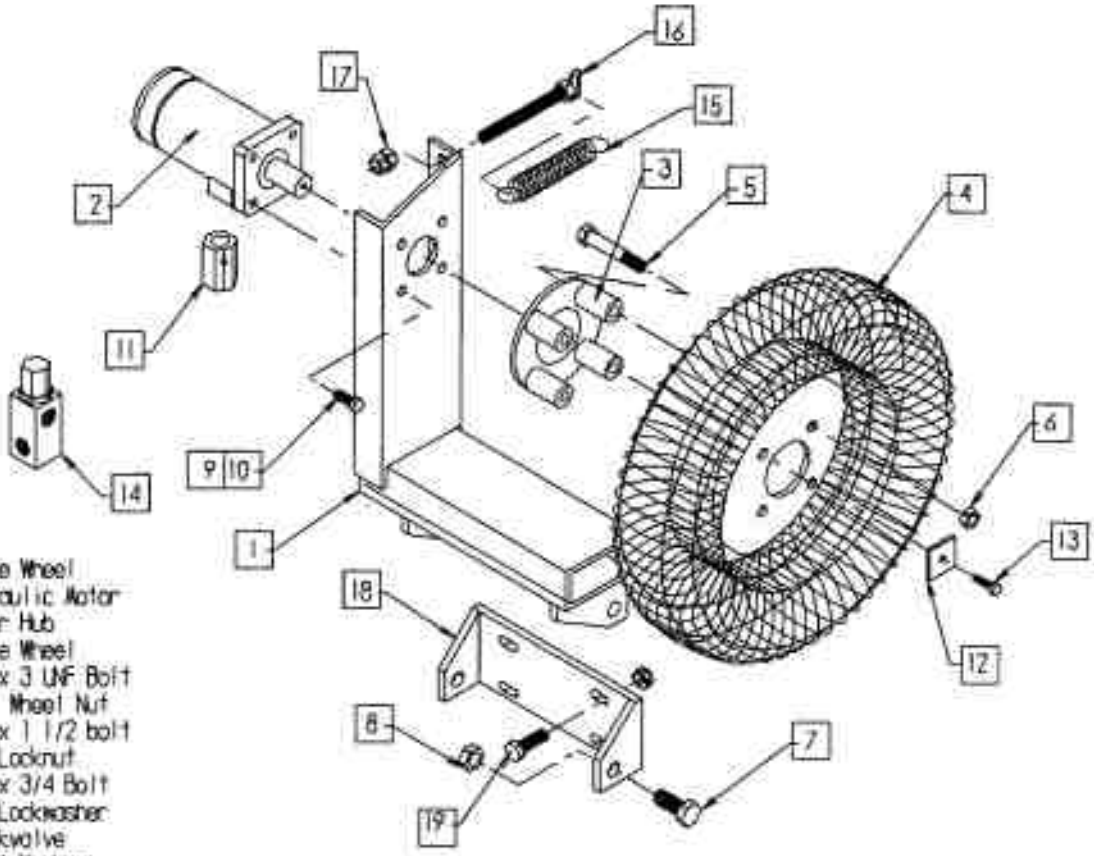

1. Drive Wheel
2. Hydraulic Motor
3. Motor Hub
4. Drive Wheel
5. 1/2 x 3 UNF Bolt
6. 1/2" Wheel Nut
7. 5/8 x 1 1/2 bolt
8. 5/8 Locknut
9. 3/8 x 3/4 Bolt
10. 3/8 Lockwasher
11. Checkvalve
12. Wheel Washer
13. 1/4 x 1 Bolt c/w Lockwasher
14. Relief Valve (manual model only)
15. Wheel Tensioner Spring
16. Spring Tensioner Bolt
17. 1/2" Nuts
18. Drive Wheel Base Bracket
19. 3/8 x 1 1/2 Bolt c/w nut Flatwasher & Lockwasher

Tube-Line 550

Axle/spindle/hub

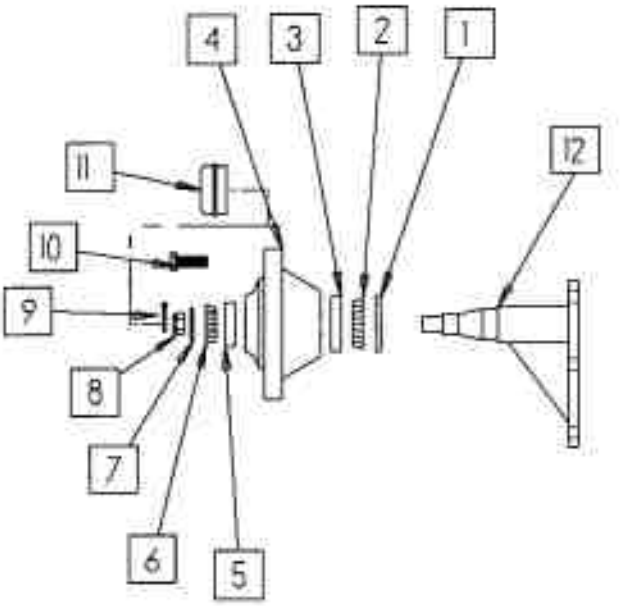

1	seal
2	inner bearing
3	inner bearing race
4	hub
5	outer bearing race
6	outer bearing
7	flat washer
8	wheel nut
9	cotter pin
10	wheel stud
11	dust cap
12	Spindle

Tubeline 5500
Front Steering Assy

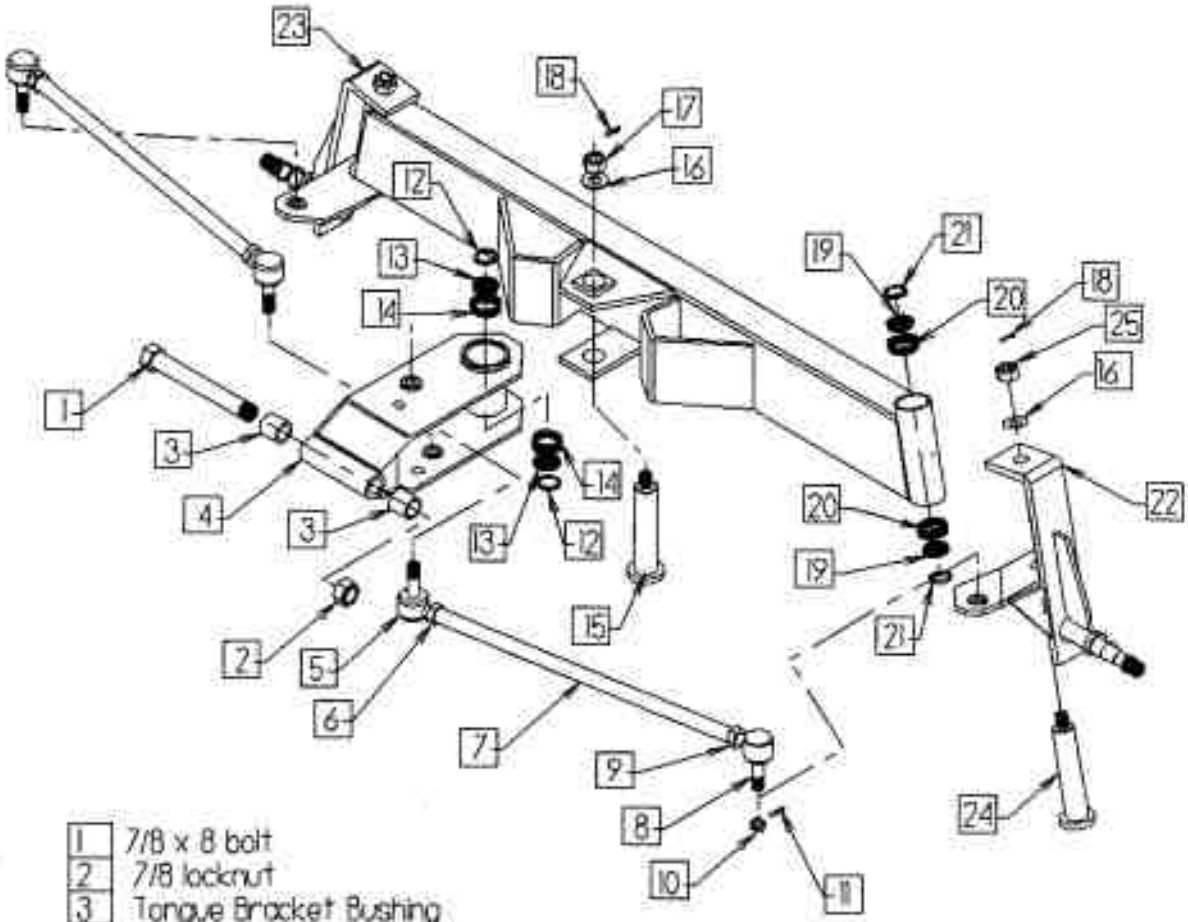

1	7/8 x 8 bolt
2	7/8 locknut
3	Tongue Bracket Bushing
4	Tongue Bracket Assy
5	Tie Rod End - Right Thread
6	3/4 Jam Nut (NF RH)
7	Tie Rod
8	Tie Rod End - Left Thread
9	3/4 Jam Nut (NF LH)
10	9/16 NF Slotted Hex Nut
11	1/8 x 1 Cotter Pin
12	Tongue Bracket Seal
13	Tongue Bracket Timkin Bearing
14	Tongue Bracket Timkin Cup
15	Tongue Bracket Pin
16	13/16 Flat Washer
17	Tongue Bracket Nut
18	3/16 x 2 Cotter Pin
19	Spindle Bearing Timkin Cone
20	Spindle Bearing Timkin Cup
21	Spindle Bearing Seal
22	Left Side Spindle Assy
23	Right Side Spindle Assy
24	Spindle Pin

Tube - Line 550
Brakes

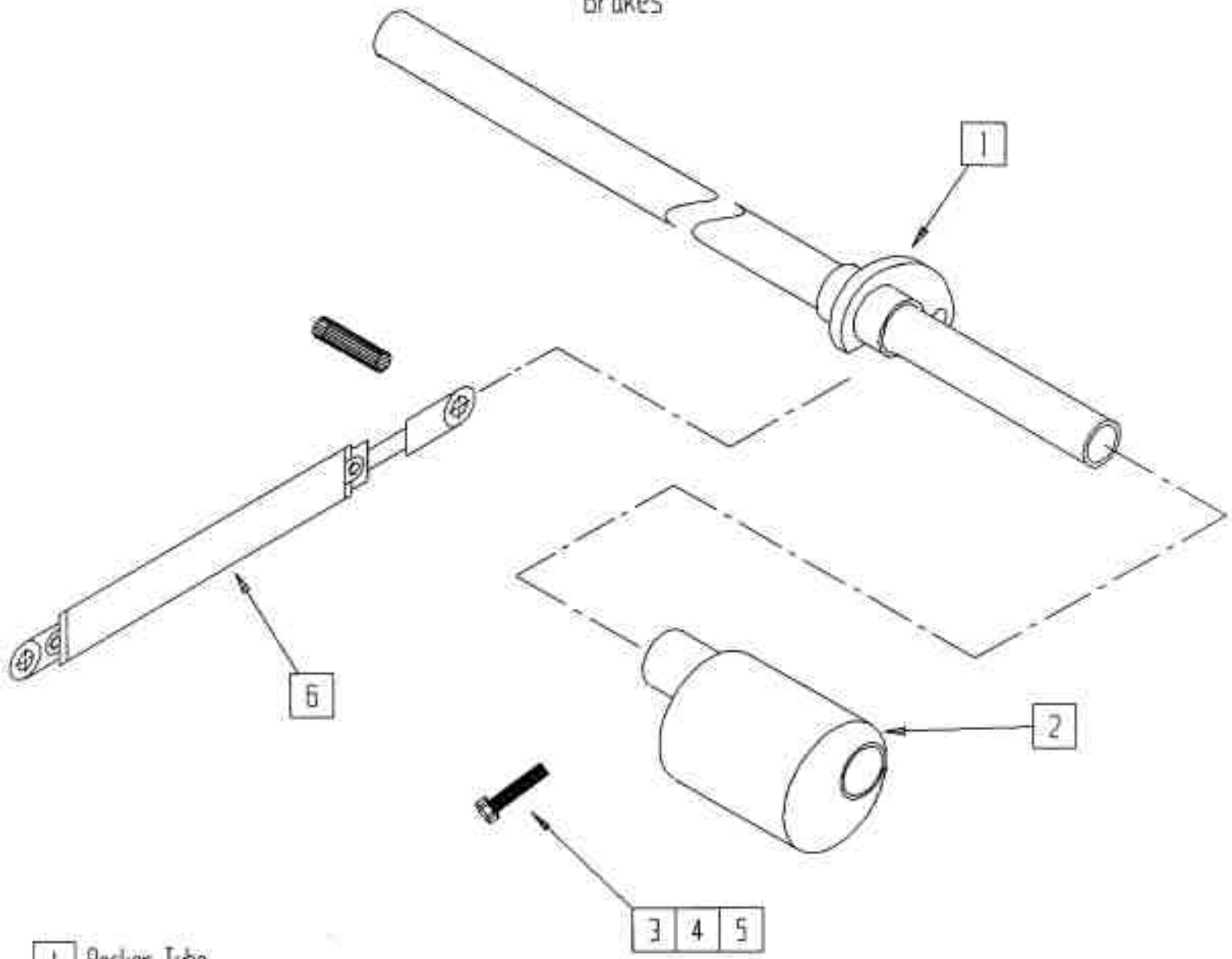

1	Racker Tube
2	2 pc brake eccentric
3	2 pc 1/2 x 3 1/2 bolt
4	2 pc lockwasher
5	2 pc 1/2 nut
6	2 1/2 x 8 hydraulic cylinder

Tube-Line 5500

rear roller

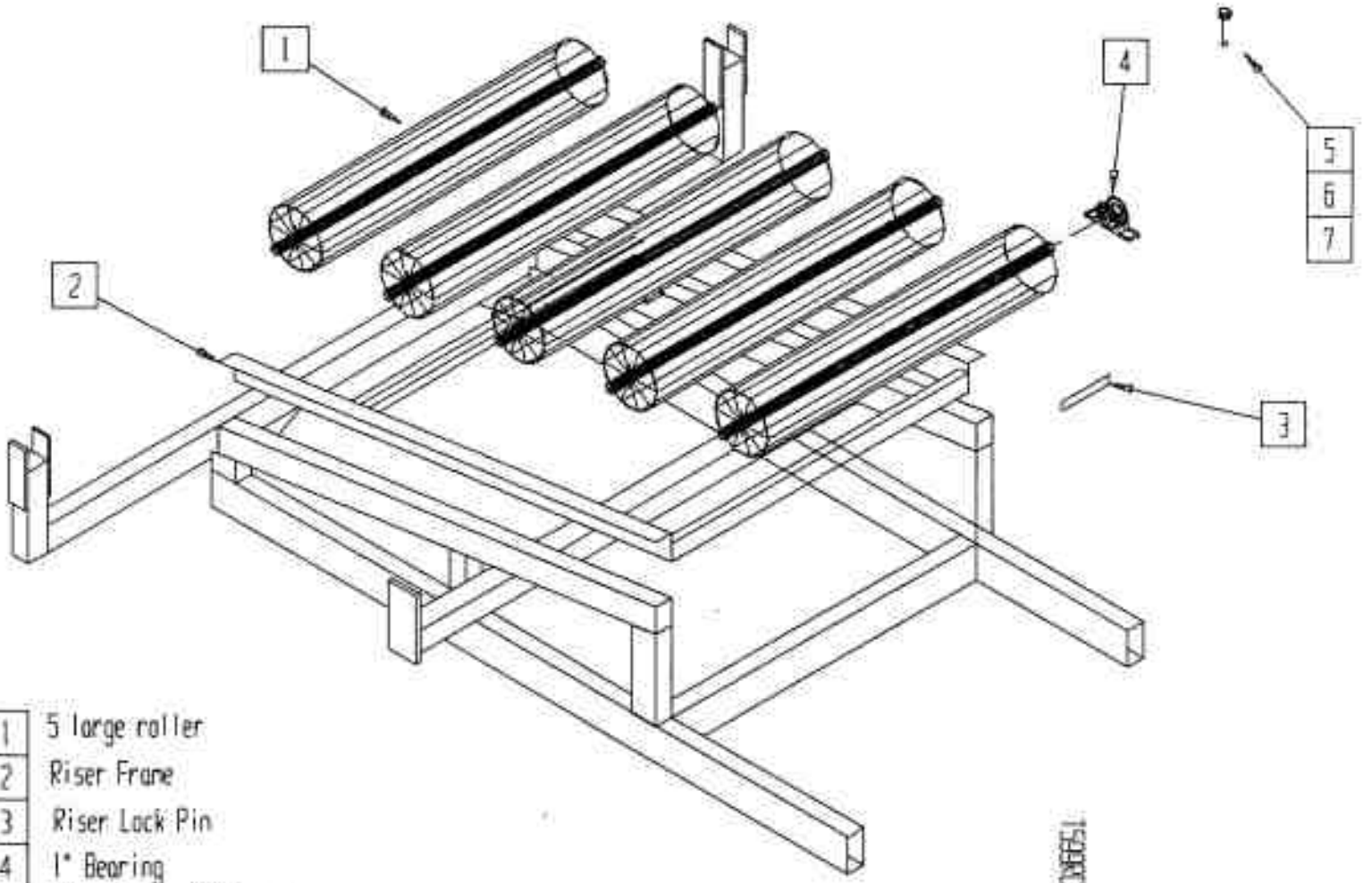

1	5 large roller
2	Riser Frame
3	Riser Lock Pin
4	1" Bearing
5	20 pc 3/8 x 1 1/2 Bolt
6	20 pc 3/8 lockwasher
7	20 pc 3/8 Flatwaher

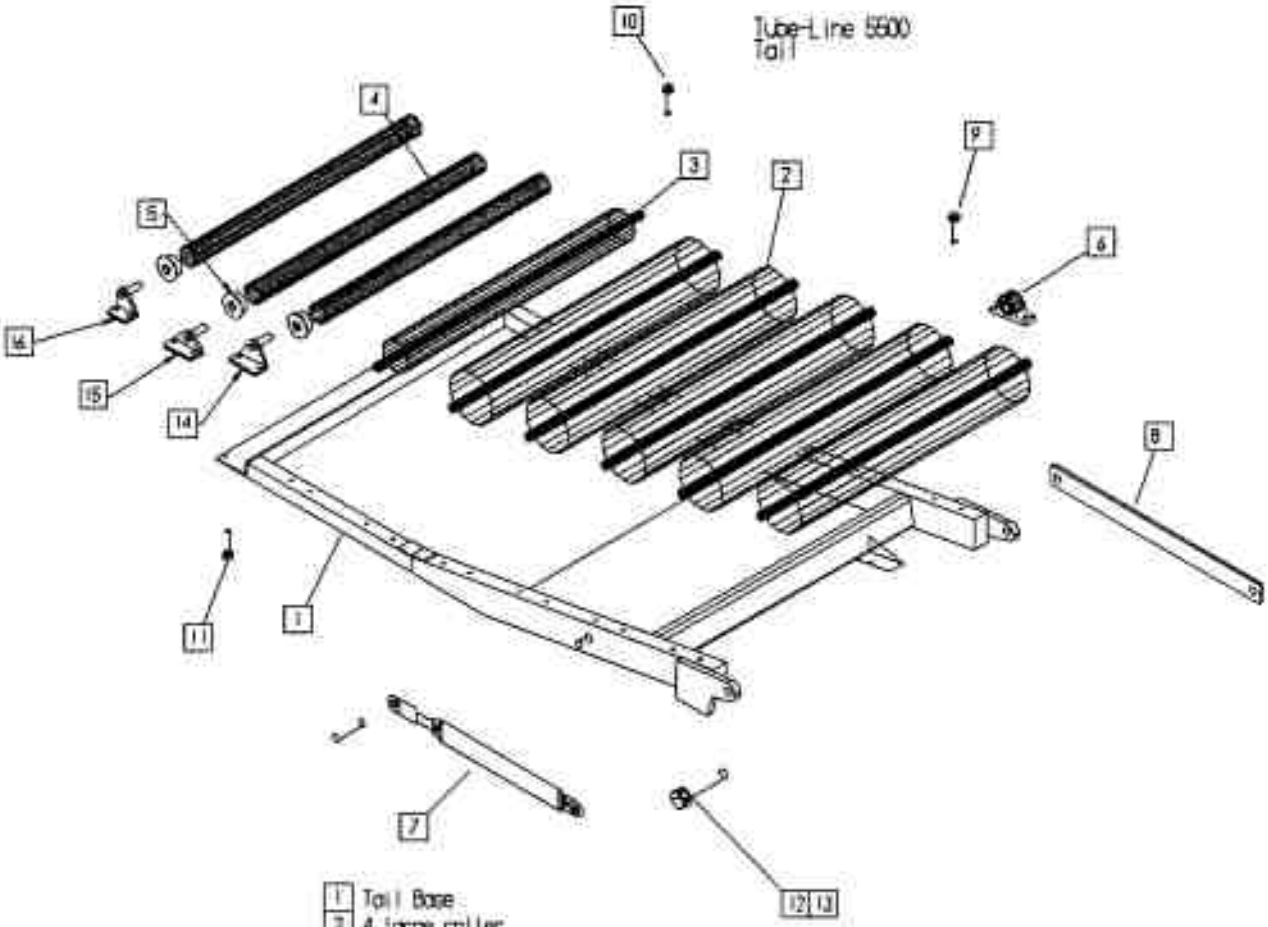

1	Tail Base
2	4 large roller
3	1 pc 4" roller
4	2 pc 3" roller
5	4 pc 3/4" bearing
6	10 pc 1" bearing
7	3 X 12 hydraulic cylinder
8	tail tie bar
9	3/8 x 1 1/2 bolt
10	5/16 x 1 bolt
11	4 pc 5/16 x 1 1/2 bolt
12	2 pc 1 x 3 1/2 bolt
13	2 pc 1" Nylocknut
14	First Small Roller bracket
15	2 nd Small Roller Bracket
16	Last Small Roller bracket

Tubeline 5500
Bale Saddle

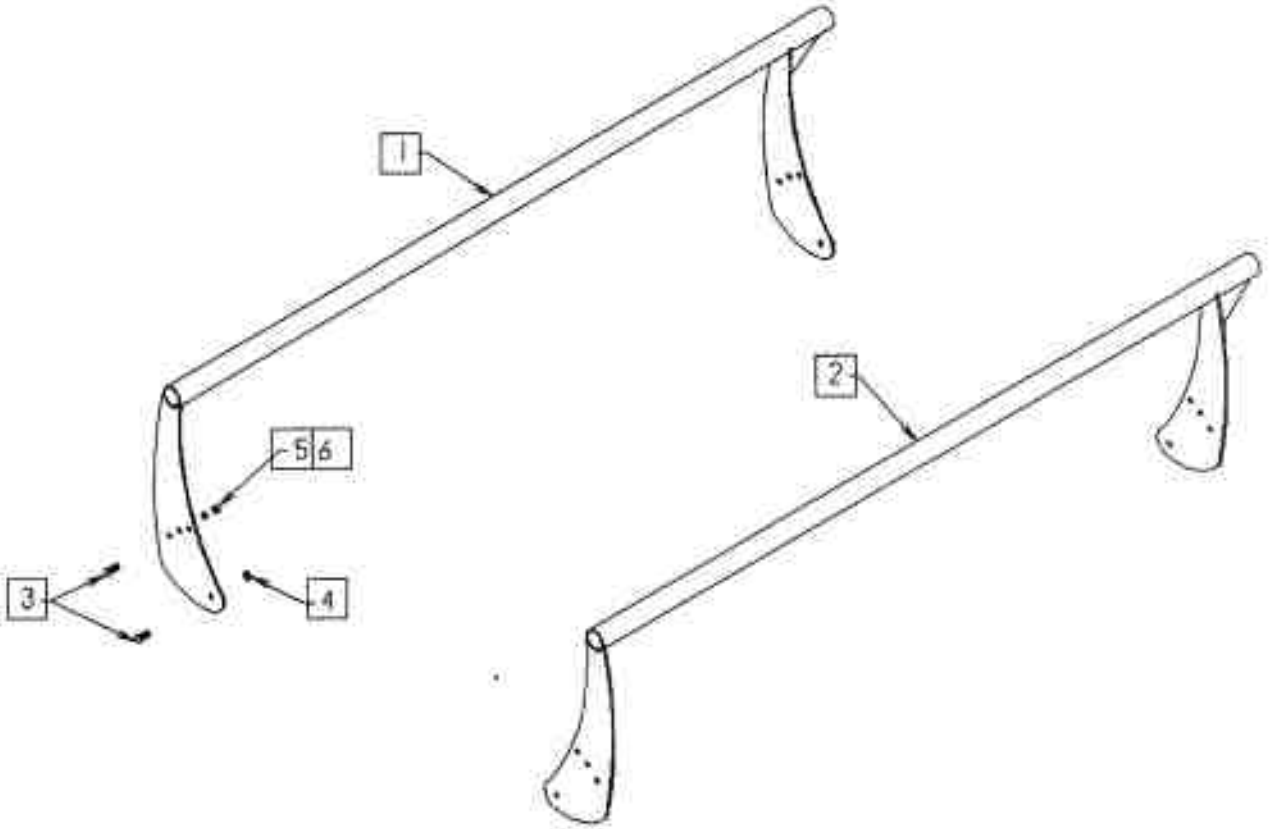

1 Bale Saddle (Right Side)
2 Bale Saddle (Left Side)3
3 1/2 x 1 1/4 Bolt
4 1/2 Locknut
5 1/2 Nut
6 1/2 Lockwasher

Tube-Line 5500

Ram

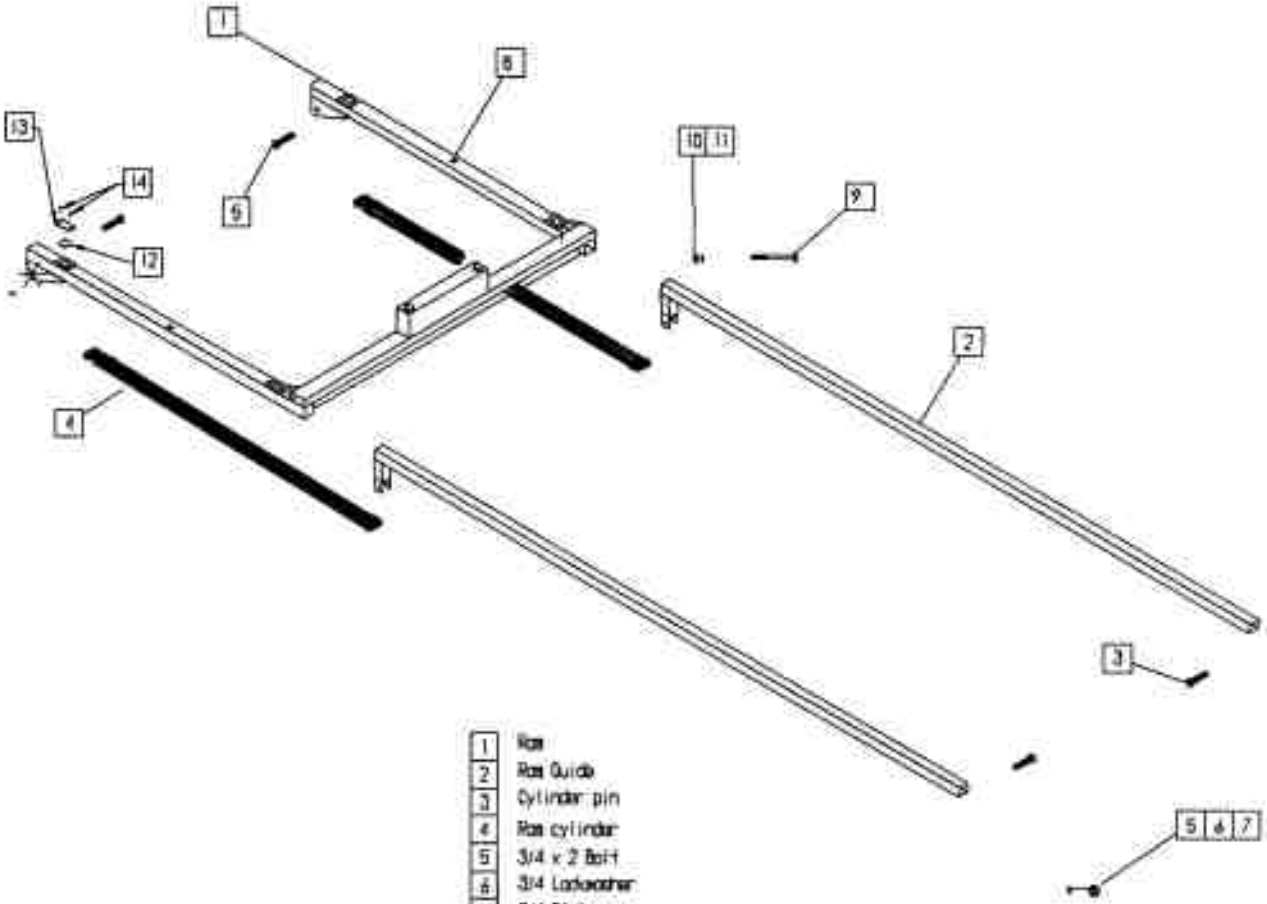

1	Ram
2	Ram Guide
3	Cylinder pin
4	Ram cylinder
5	3/4 x 2 Bolt
6	3/4 Lockwasher
7	3/4 Flatwasher
8	2 pc 1/4 - 28 grease fitting
9.	2 pc 1/2 X 4 bolt
10	2 pc 1/2 nut
11	2 pc 1/2 lockwasher
12	1/2 x 2 x 2 HMPVC slider block
13	Slider Retainer
14	1/4 x 1/2 Hex Socket Bolt

Tube-Line 5500
Push-Off

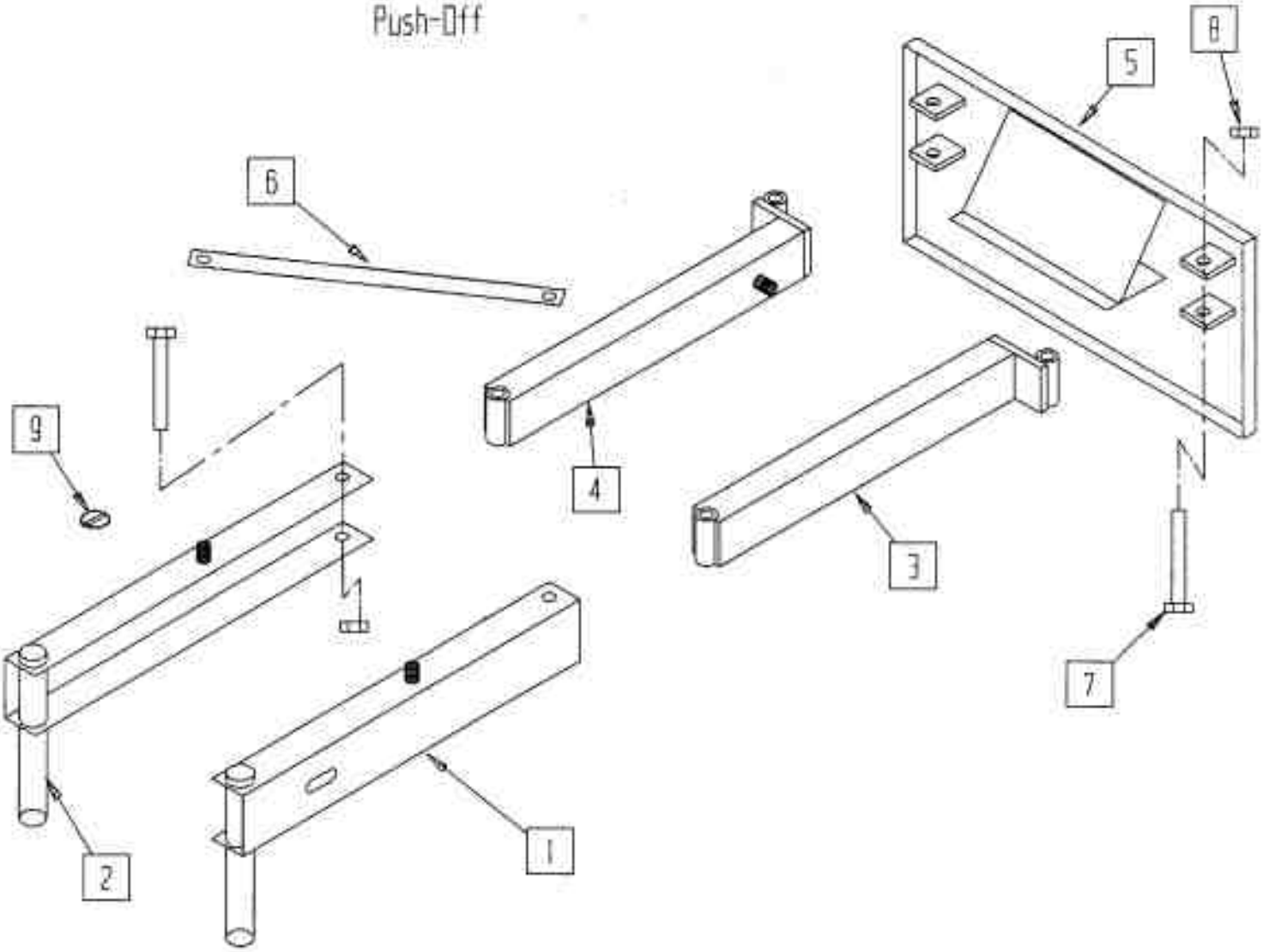

1	Left Front Arm
2	Right Front Arm
3	Left Rear Arm
4	Right Rear Arm
5	Push Plate
6	2 pc X Bar
7	4 pc 3/4 x 5 Bolt
8	4 pc 3/4 Nylocknut
9	4 pc 3/16 Lynch Pin

Tubeline 5500
Push off Channel

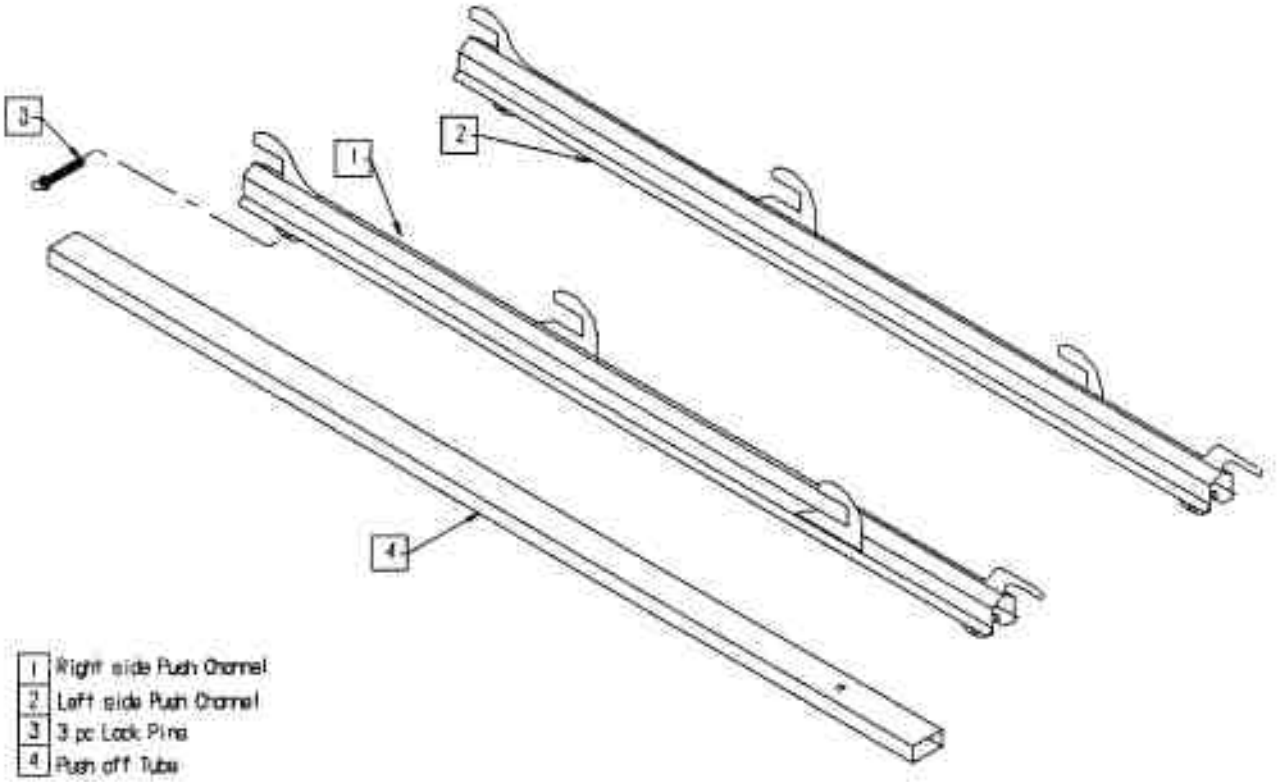

Tube-Line 550

Tongue

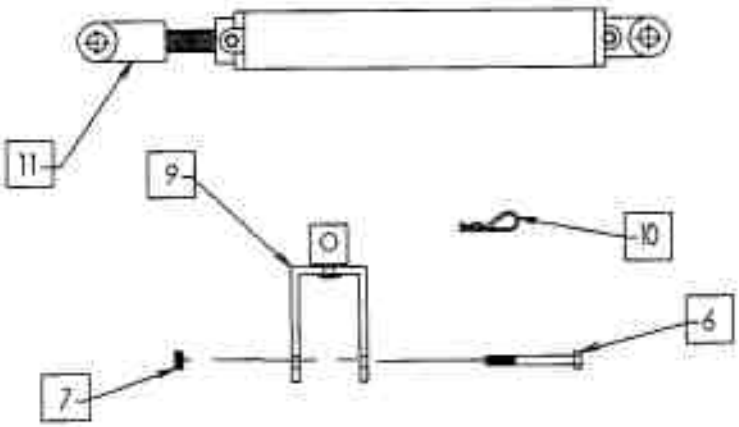

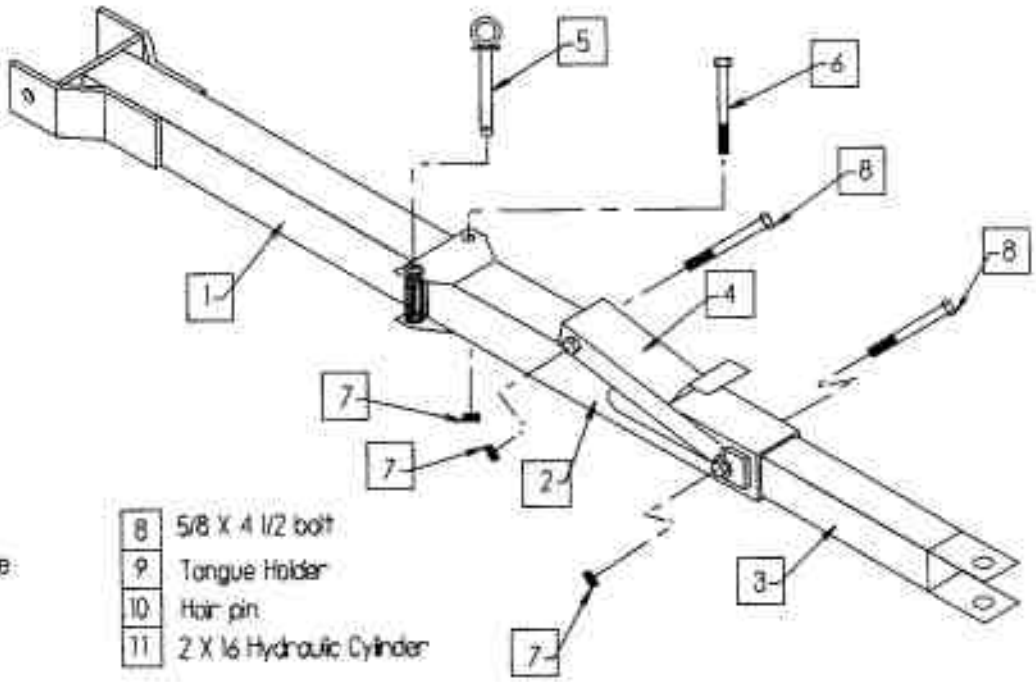

1	Main tongue
2	Swinging tongue
3	Sliding tongue
4	Tongue latch
5	Tongue pin
6	5/8 X 5 bolt
7	5/8 locknut
8	5/8 X 4 1/2 bolt
9	Tongue Holder
10	Hair pin
11	2 X 16 Hydraulic Cylinder

Tube-Line 5500/6500
Mud Flap

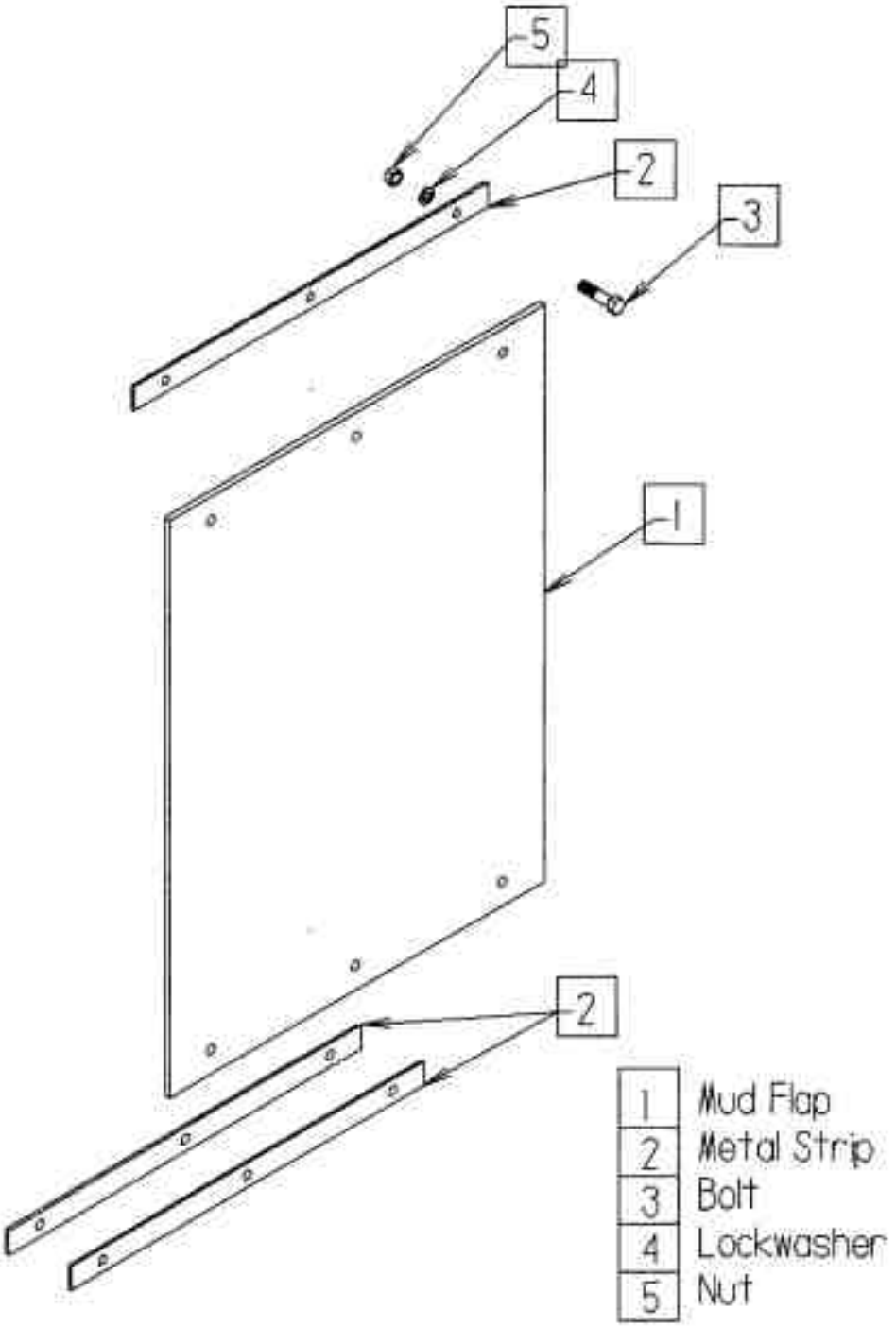

Tube-Line 5500/6500

Hydraulic tank

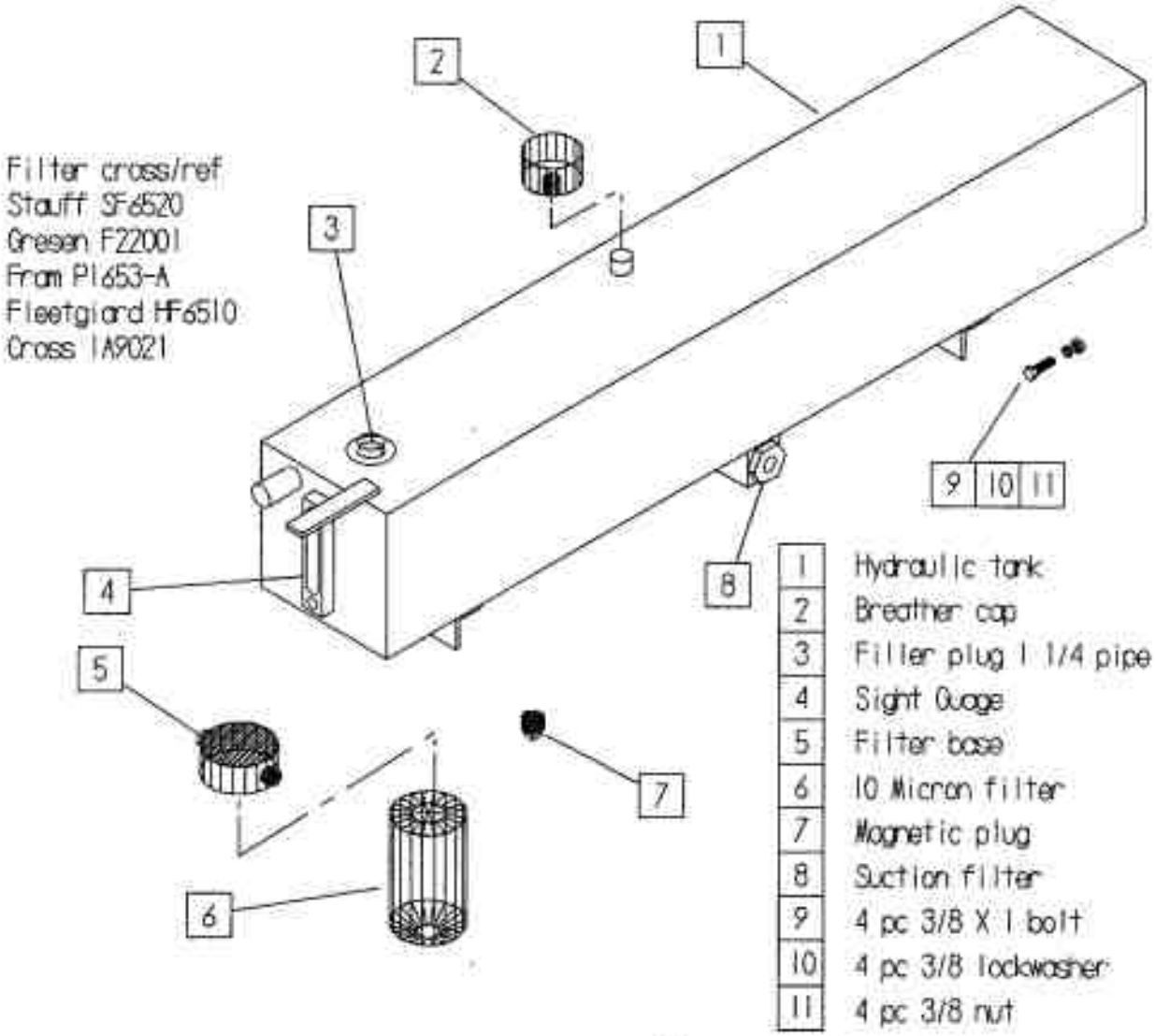

1	Hydraulic tank
2	Breather cap
3	Filler plug 1 1/4 pipe
4	Sight Guage
5	Filter base
6	10 Micron filter
7	Magnetic plug
8	Suction filter
9	4 pc 3/8 X 1 bolt
10	4 pc 3/8 lockwasher
11	4 pc 3/8 nut

Tube-Line 5500/6500

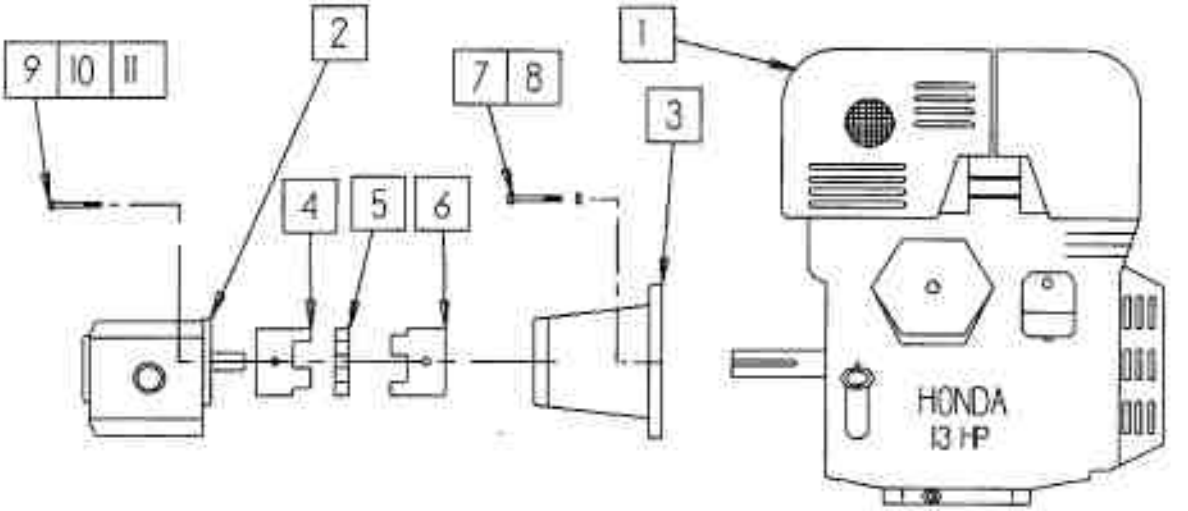

1	13 Hp HONDA Engine
2	Hydraulic Pump
3	Engine to pump adaptor
4	Love Joy Coupling
5	Coupling spacer
6	Love Joy Coupling engine

7	4 pc 3/8 X 1 bolt
8	4 pc 3/8 lockwasher
9	2 pc 3/8 1 1/4 bolt
10	2 pc 3/8 lockwasher
11	2 pc 3/8 flatwasher

Tube-Line 5500

Engine cover & decal plate

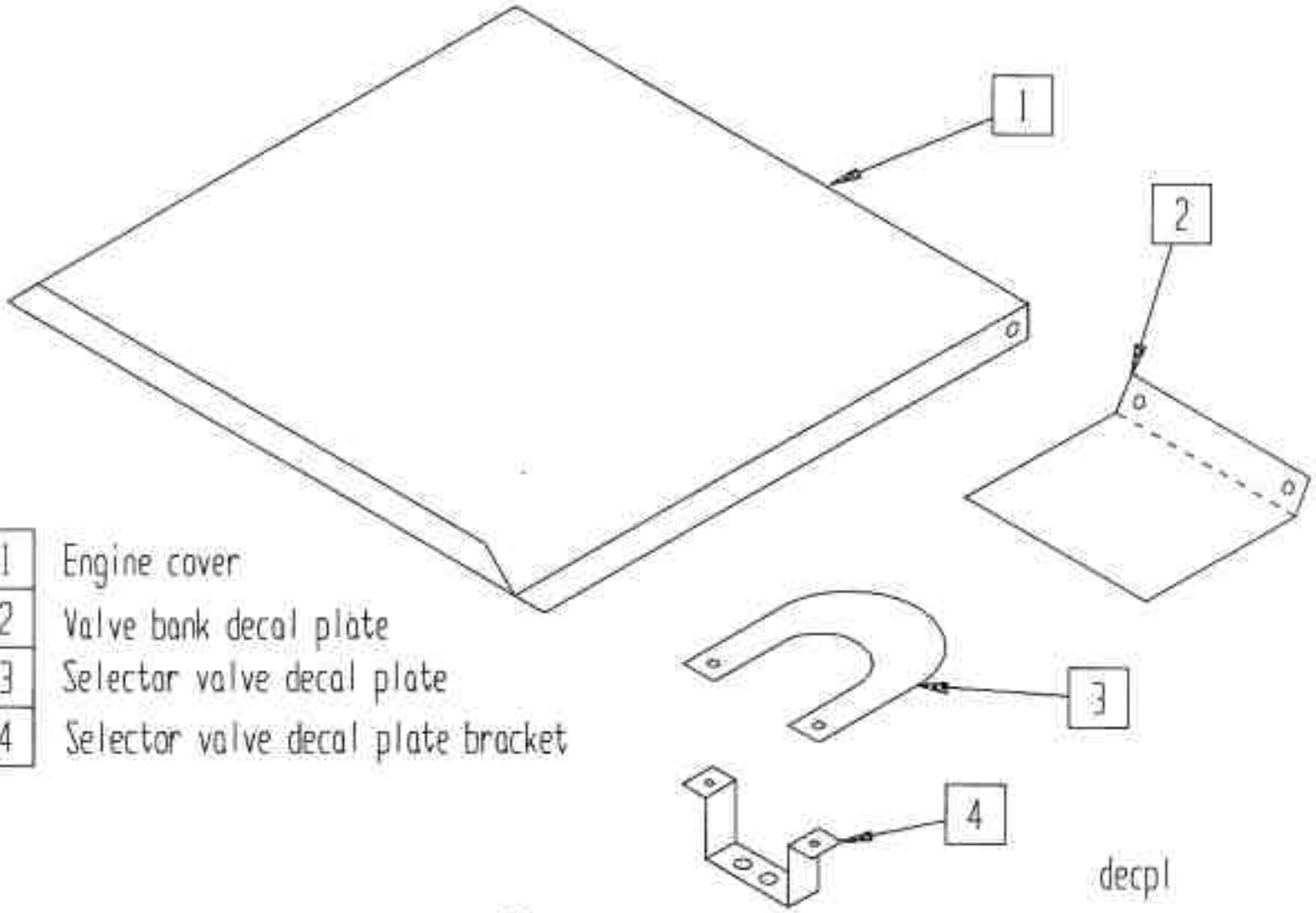

1	Engine cover
2	Valve bank decal plate
3	Selector valve decal plate
4	Selector valve decal plate bracket

decpl

Tube-Line 500
Manual valve bank

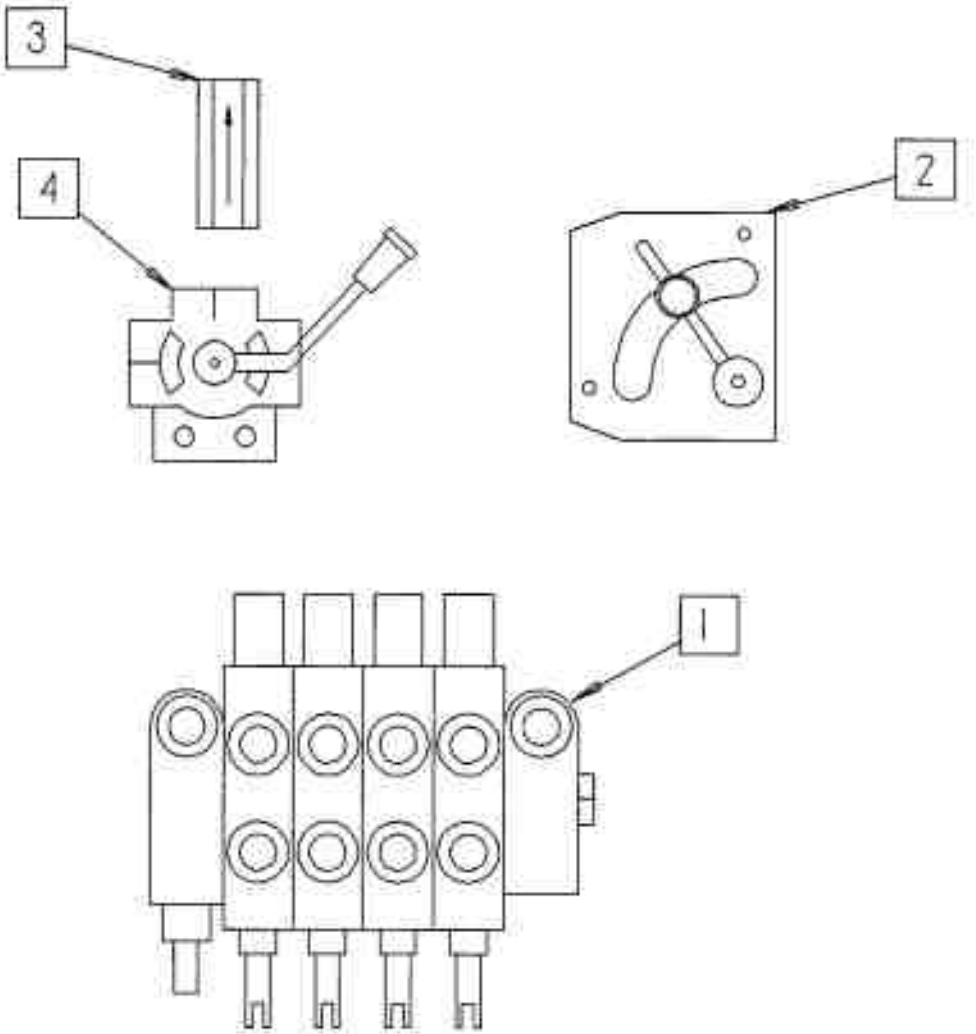

1	CPV0014 Valve stack
2	RD - 150 - 16 Flow control
3	1/2 Check valve
4	Selector Valve

Tube-Line 500

Electric Solenoid Valve

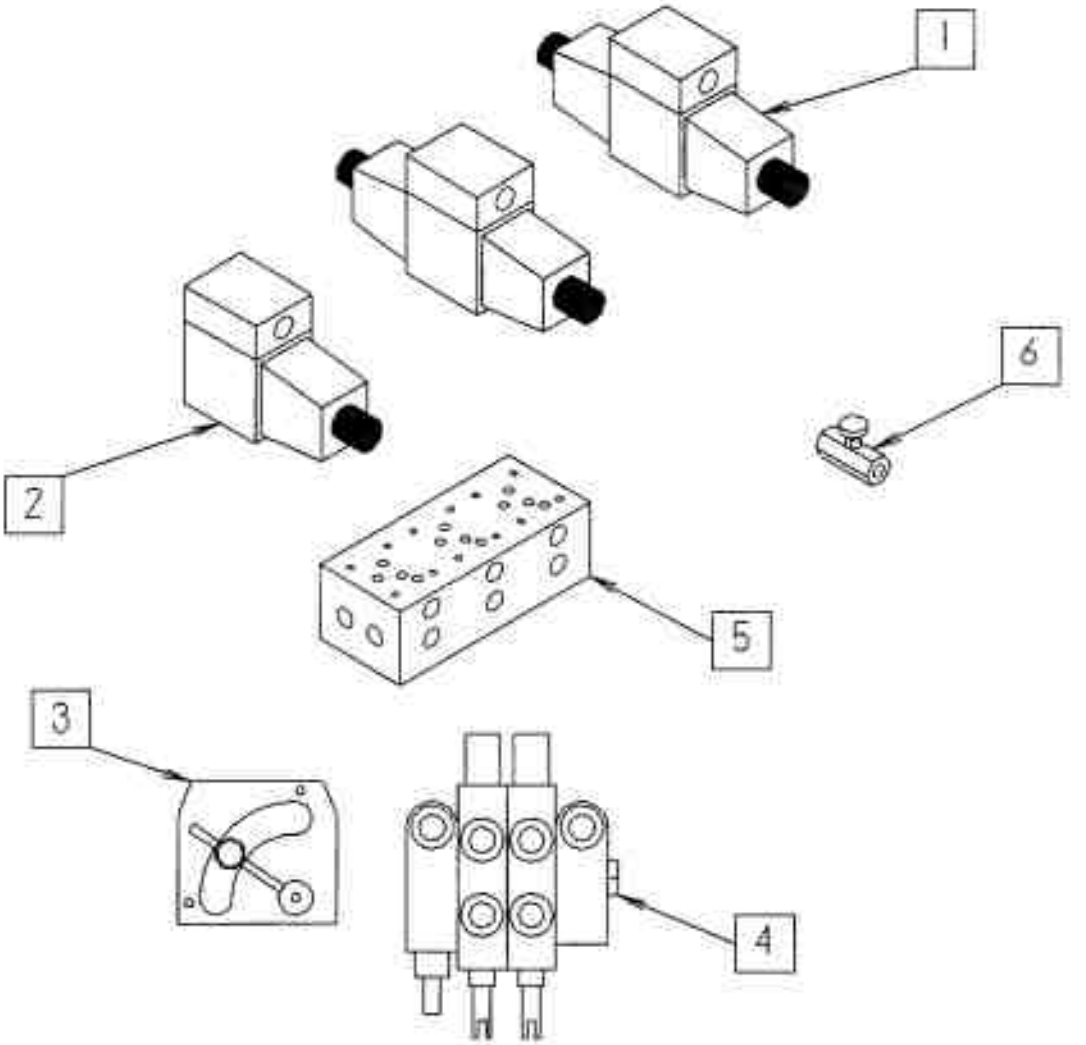

1	2 pc VS12K3L08/75L tandem center 12 vdc
2	VS12A1A08/75L single sol 12 vdc
3	RD-150-08 Flow control
4	2 spool monoblock valve
5	3 station manifold
6	Steering speed control valve

Tube-Line 5500

Limit Switch

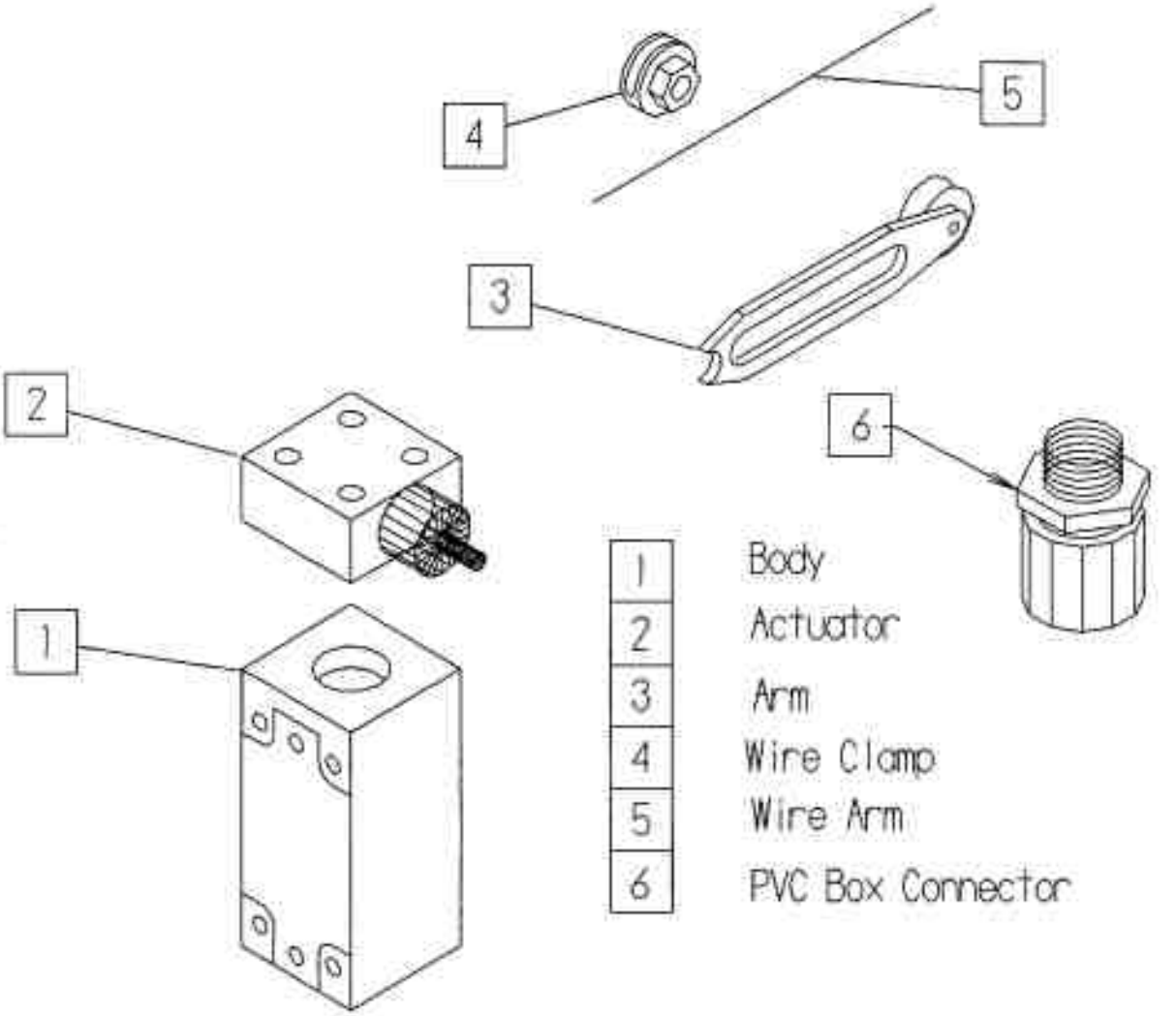

1	Body
2	Actuator
3	Arm
4	Wire Clamp
5	Wire Arm
6	PVC Box Connector

Tuber-Line 5500
Control Panel

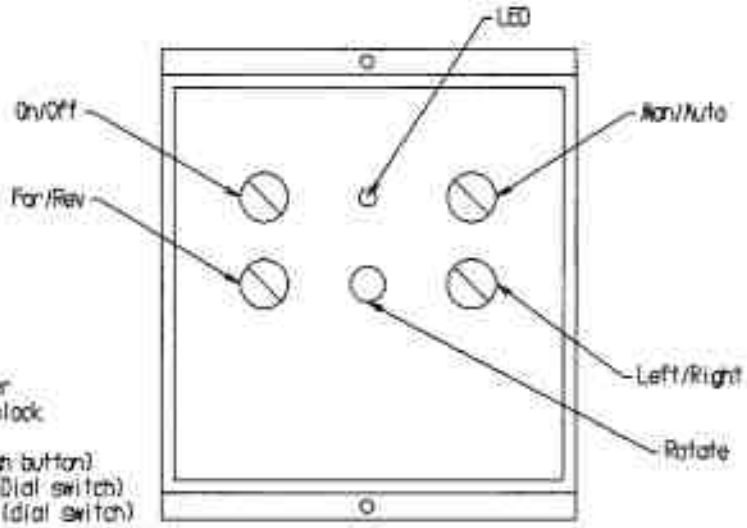

1 - Control Panel Assy.
2 - Control Relay
3 - 11 pin relay base
4 - 15 amp. fuse
5 - Din rail fuse holder
6 - Din rail terminal block
7 - On/Off Switch
8 - Rotate switch (push button)
9 - Man/Auto switch (Dial switch)
10 - Rate and steering (dial switch)
11 - LED
12 - Diode

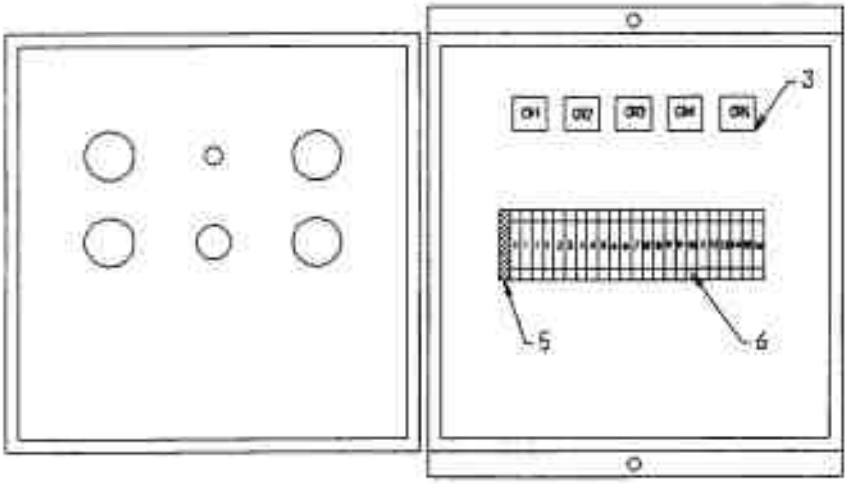

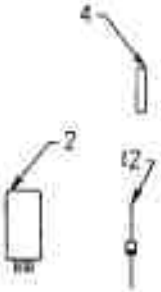

Tube-Line 500

Trigger & Batery hold down

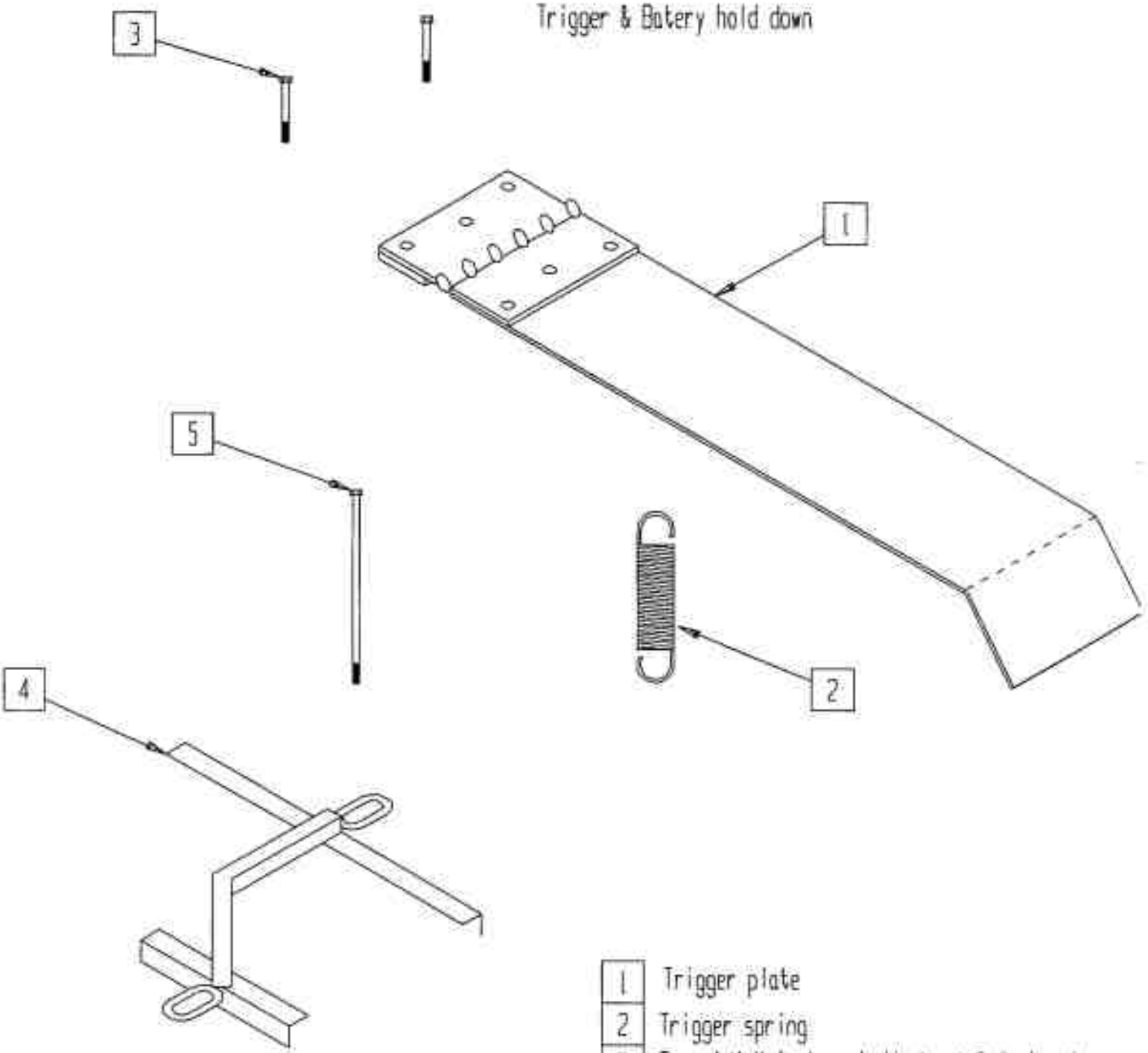

1	Trigger plate
2	Trigger spring
3	2 pc 1/4 X 1 stove bolt / nut & lockwasher
4	Battery hold down
5	2 pc 5/16 X 7 carrage bolt / nut / lockwasher

Tubeline 599
Throttle Bracket

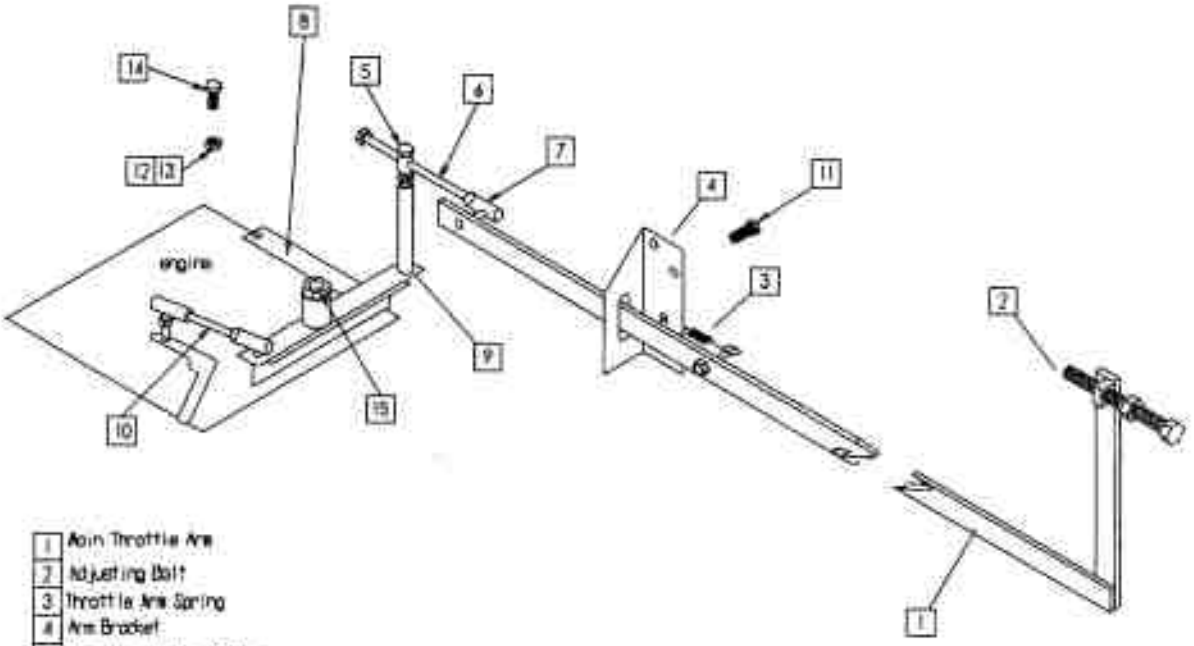

1 Main Throttle Arm
2 Adjusting Bolt
3 Throttle Arm Spring
4 Arm Bracket
5 Throttle Linkage Pivot
6 1/4 x 5 UNF Bolt
7 Throttle Ball Joint
8 Engine Bracket
9 Rocker Bar
10 1/4 x 4 UNF Threaded Rod c/w 2 nuts
11 6 pc 5/16 x 1 Bolt
12 9 pc 5/16 Nuts
13 9 pc 5/16 Lockwasher
14 3 pc 5/16 x 1 1/2 Bolt
15 1/2 Locknut

Tube-Line 5500

Manual Hydraulic Schematic

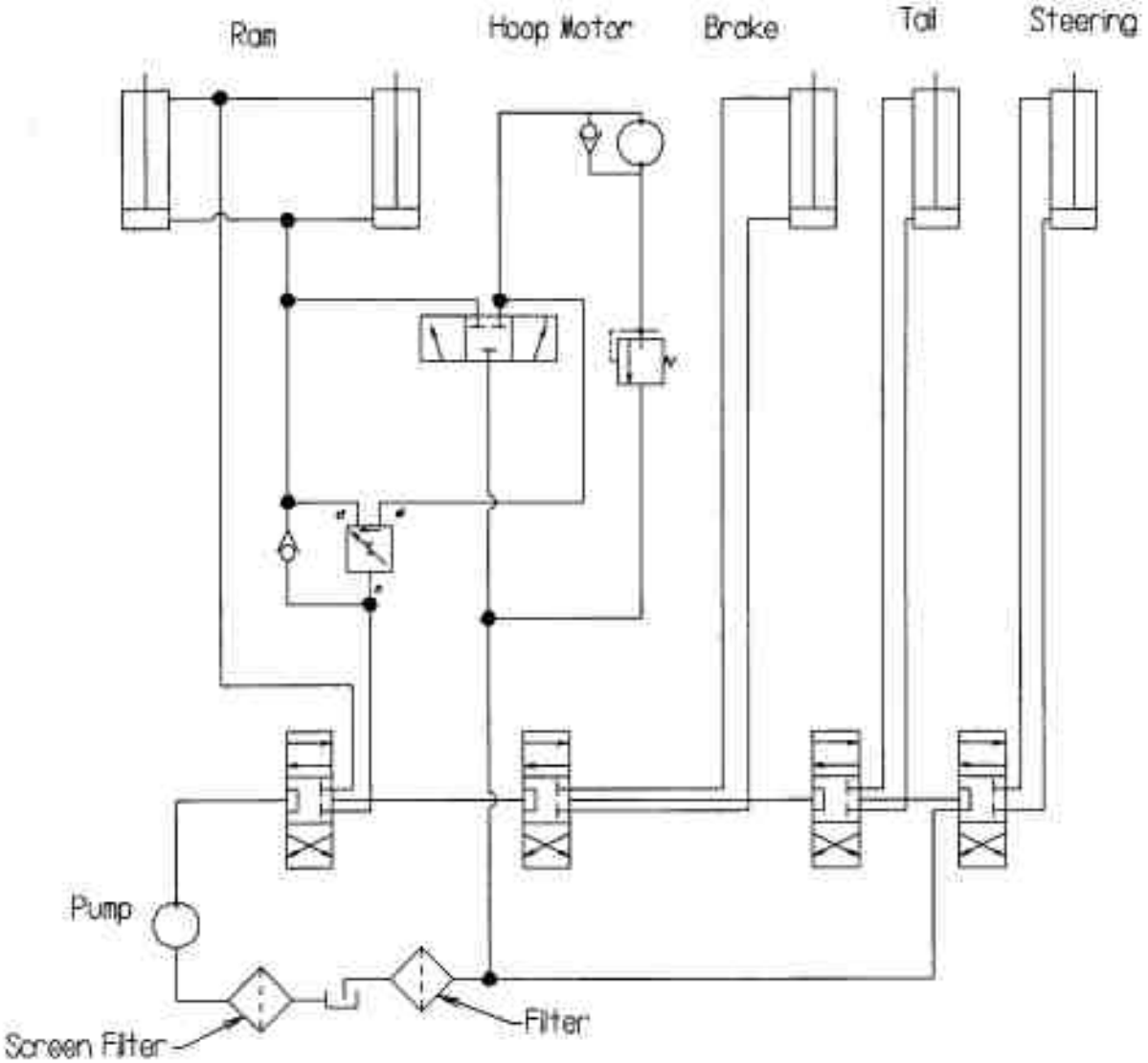

Tubeline 5500
Electric Hydraulic Schematic

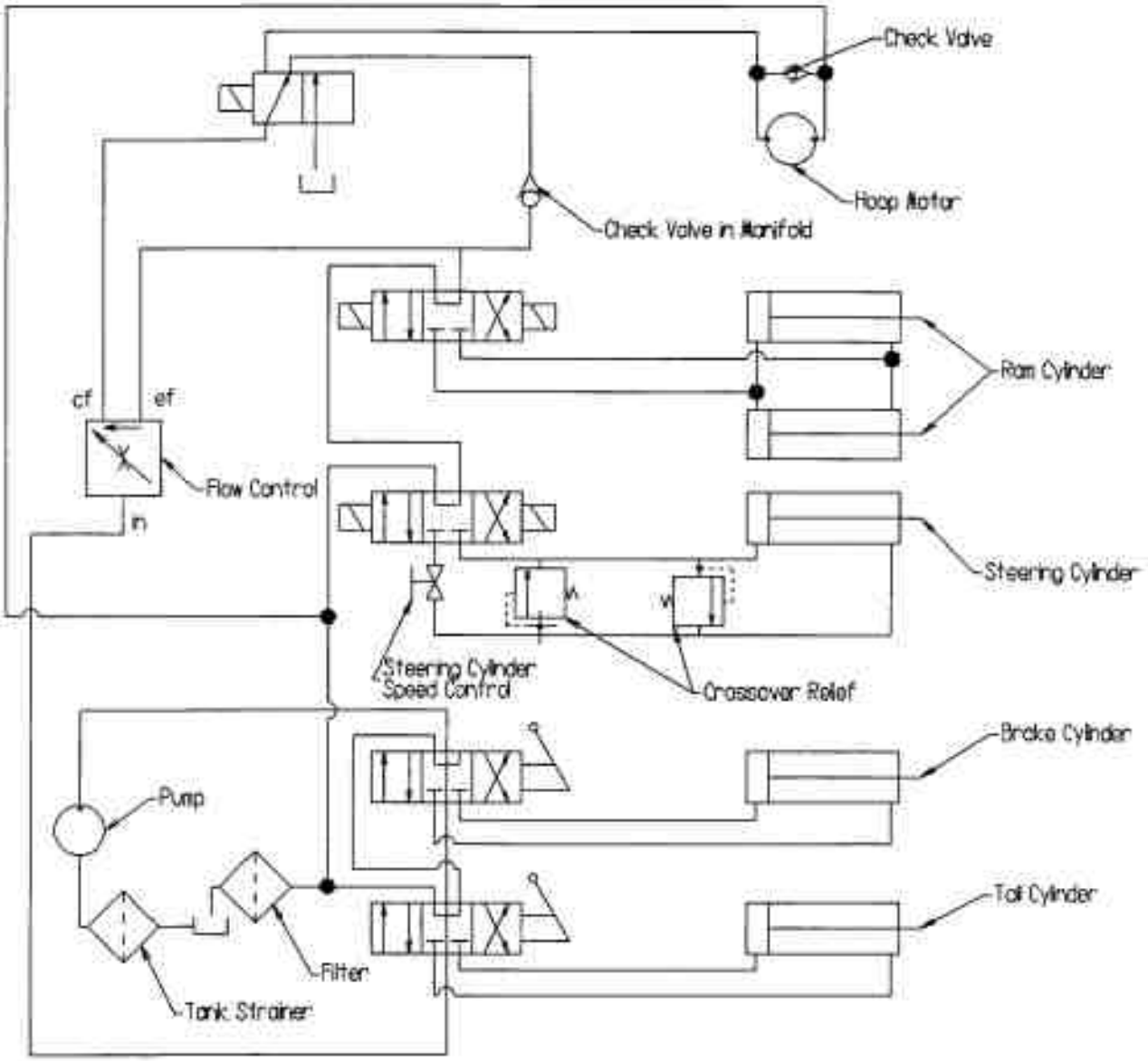

TubeLine 599
Electric Wiring Diagram

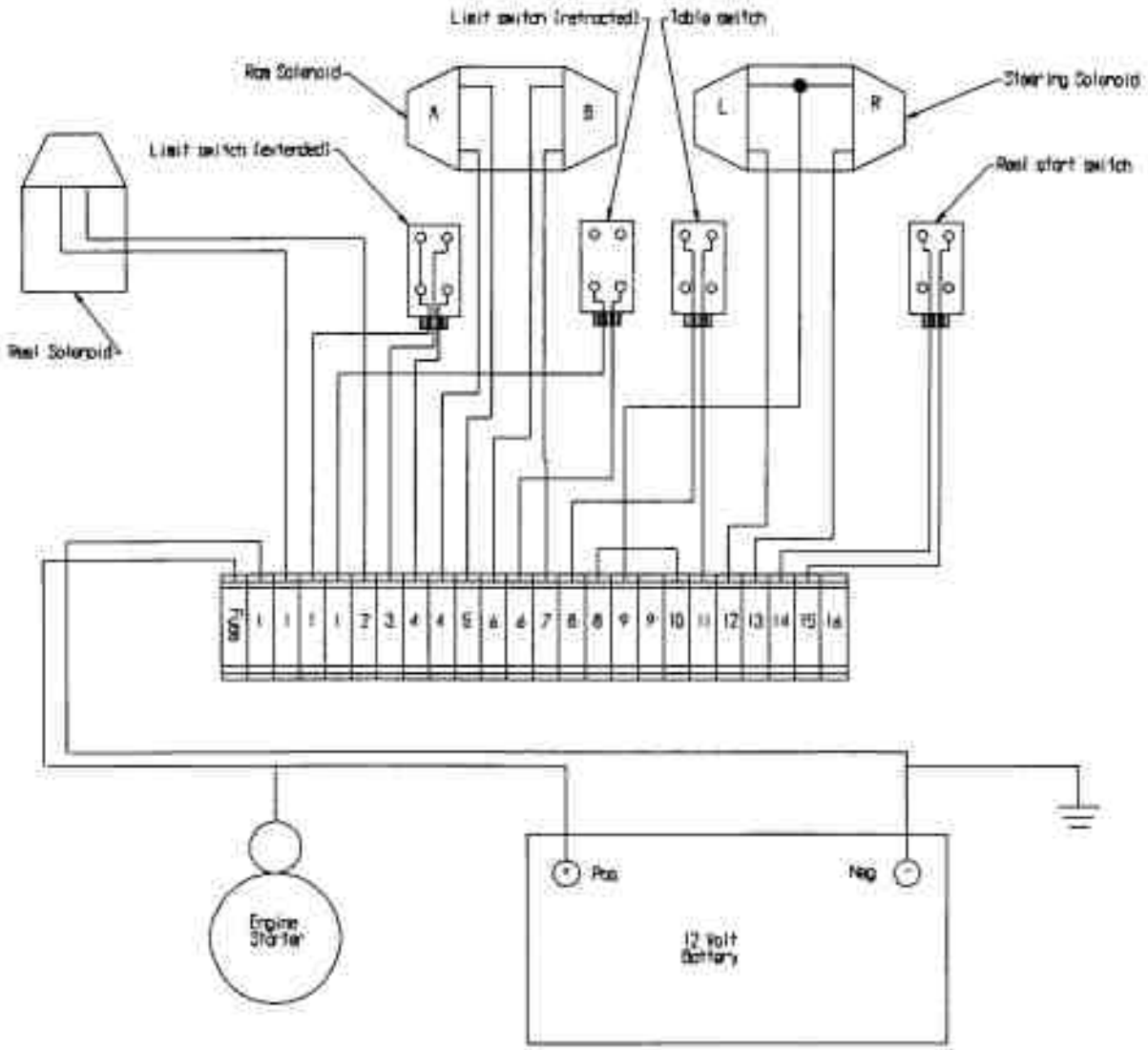

Tube-Line 599
Electric Control Panel Schematic

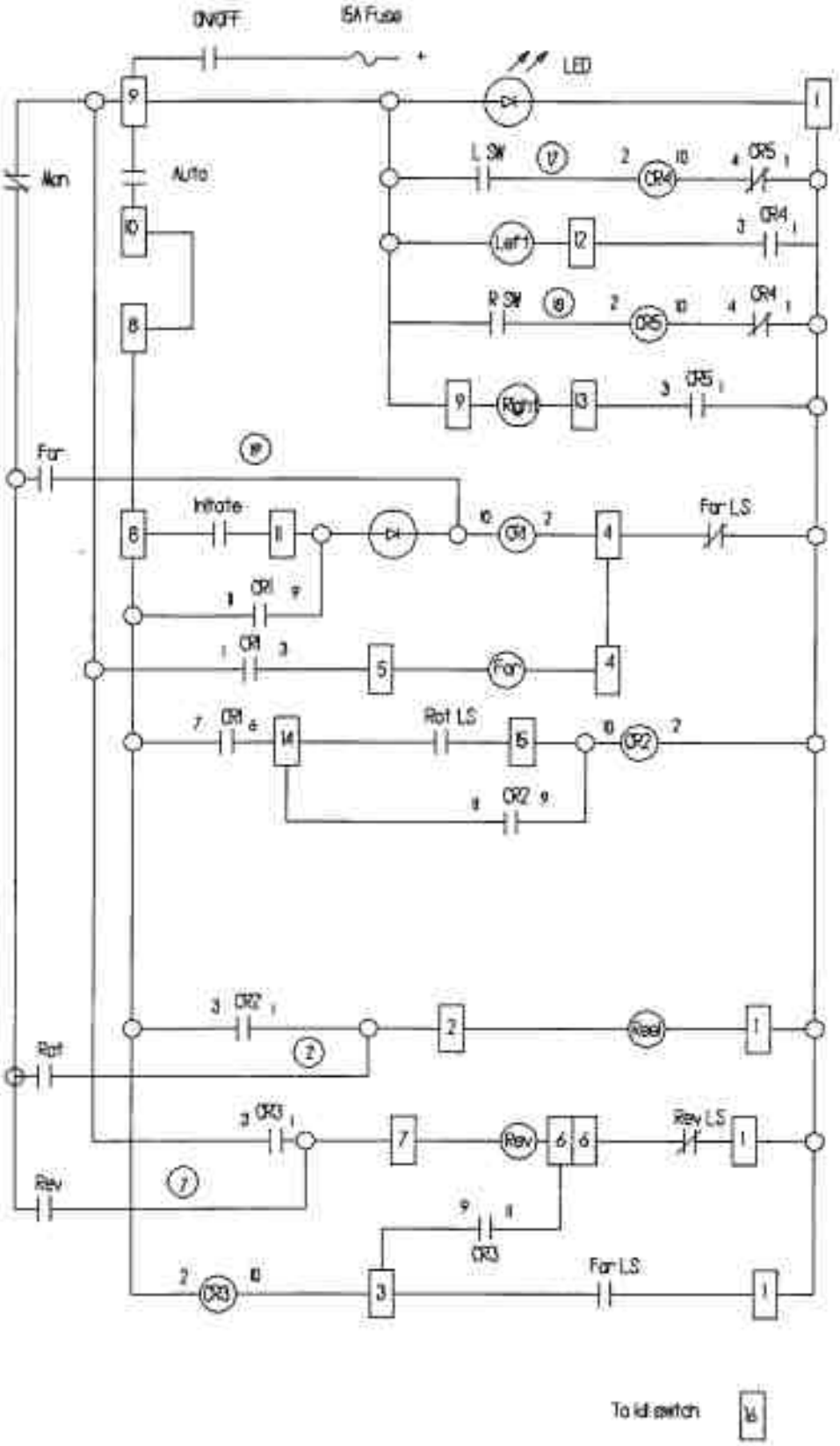

Fuse block pos-12 VDC
#1 Neg 12VDC
#1 reel solenoid
#2 reel solenoid
#1 Forward L/S Com
#3 Forward L/S NO
#4 Forward L/S NC
#4 Forward Solenoid
#5 Forward solenoid
#1 Reverse L/S NC
#6 Reverse L/S NC
#6 Reverse solenoid
#7 Reverse solenoid
#8 Fin sensor L/S
#10 Fin sensor L/S
#8 Start (trigger) L/S
#1 Start (trigger) L/S
#9 Steering Solenoid Com
#12 Steering solenoid Left
#13 Steering solenoid Right
#14 Rotation L/S NO
#15 Rotation L/S
#16 Kill switch

Tube-Line 5500

Manual Hydraulic
Sequence of Operation

1 With valves in neutral position, engine running hydraulic fluid is pumped through valve bank and returned to reservoir.

2 Brakes, tail and steering are standard hydraulic cylinder operation.

3 Wrap cycle – push wrap valve in, detent will hold valve in position, fluid flows from valve through flowcontrol and is split into 2 circuits, one circuit will go to ram cylinders and the other will go to hydraulic motor. These circuits are proportioned with the lever on flowcontrol valve. With the selector valve handle in "Both" position flow will go to cylinder and motor. By changing flowcontrol handle, the cylinders will speed up or slow down accordingly. At the same time motor will change speed inversely to cylinder ie. when cylinder slows down motor will speed up.

4 Selector valve is used to bleed either cylinder or motor flow back to tank, or block both circuits causing both cylinder and motor to operate. ie. With handle in wrap only position the fluid that would normally go to the cylinder will flow back to tank. With handle in ram only position motor fluid will go to tank.

5 Wrap cycle – pull wrap valve out, detent will hold valve in position, fluid will flow from valve port causing cylinder to retract. Fluid from other end of cylinder will return through check valve, at flowcontrol back through valve stack and to tank.

6 Check valve at motor lets motor freewheel in one direction without cavitating. Relief valve at motor return acts as a restrictor valve to keep motor from turning when ram cylinder is retracting.

Tube-Line 5500

Electric Hydraulic
Sequence of operation

1 With valves in neutral position, control panel on/off switch in off position, engine running fluid is pumped through valve stack and returned to reservoir.

2 Brakes and tail are standard hydraulic cylinder operation.

3 Wrap cycle fluid flows from power beyond port on 2 spool valve to flowcontrol, and is split into 2 circuits one circuit goes to double solenoid valve for ram cylinder, the other circuit goes to single solenoid valve for hydraulic motor. By moving flowcontrol handle more or less fluid will flow to cylinder or motor ie. as more fluid flows to cylinder less fluid will flow to motor and vise-versa.

4 Electric control panel- "Man-Auto" switch turned to "Man". Turn "On/Off" switch to On, then red LED will light up indicating 12V power is at control circuits, with engine running. Turn "Forward" switch in to energize solenoid A on double solenoid valve. Ram cylinder will extend. Turn "Reverse" switch to energize solenoid B on same valve. Ram cylinder will retract. Push Rotate button in and hydraulic motor will turn. "For/Rev and Push" buttons have to be held to operate, by releasing them action will stop. Engine throttle has linkage to slow engine down when ram is all the way to the front. Spring on linkage will speed engine up as soon as Ram cylinder starts to extend.

5 When "Man/Auto" switch is turned to Auto, "For/Rev and Rotate" switches no longer function. Depress trigger switch located on bale table, Ram hydraulic valve is energized. The ram cylinder will extend and engine will speed up. When ram extends to front slider switch, this switch will energize the single solenoid valve and turning the wrap motor. When ram is extended to the limit switch at the end of stroke, single solenoid valve and double solenoid valve "A" will turn off. Solenoid B will energize causing ram cylinder to retract until it trips limit switch at the front end of bale table, solenoid "B" will turn off, the ram cylinder will stop and engine will idle down.

6 Steering is done by steering switch, right/left activating steering double solenoid valve A or B. This valve will work in either manual or automatic mode.

TUBE-LINE 5500

PART NUMBERS

Page #	Ref #	Part #	Qty	Description
1	1	550-100-001	1	Hoop Outer Ring
1	2	550-100-002	1	Hoop Inner Ring
1	3	550-100-003	2	Mounting Bolt 1/2 x 2
1	4	550-100-076	2	1/2 Nut
1	5	550-100-075	2	1/2 Lockwasher
1	6	599-100-003	2	Mounting Bolt 5/8 x 3 1/2
1	7	599-100-004	2	5/8 Nut
1	8	599-100-005	2	5/8 Lockwasher
2	1	500-200-014	8	4" Wheel
2	2	500-100-015	8	Axle Bolt \ Locknut
2	3	550-200-016	8	Spanner
3	1	550-100-004	2	Main Wrap Bracket
3	1A	550-100-090	2	Main Wrap Side Insert
3	2	550-100-005	4	1-14 UNF Castellated nut
3	3	550-100-006	4	Tensioner Roller
3	4	500-100-007	8	3/4 Flange Bearing
3	5	550-100-008	2	Small Gear
3	6	550-100-009	2	Large Gear
3	7	550-100-010	2	Gear Cover
3	8	550-100-011	2	Spool Holder
3	9	550-200-012	4	Wrap Spool
3	10	550-100-013	8	Washer
3	11	550-100-014	4	Locknut
3	13	500-100-022	2	Plastic Pipe
3	14	500-100-021	4	Plastic Bearing
3	15	550-100-016	4	Bracket
3	16	550-100-017	4	Spacer
3	17	500-100-135	4	Spring
3	18	550-100-018	2	Axle Plastic Roller
3	19	550-100-003	2	1/2 x 2 Bolt c/w Locknut
3	20	550-100-019	16	5/16 Carriage Bolt
3	21	550-100-020	4	3/16 Keystock
3	22	550-100-021	2	Grease Fitting
3	23	599-100-006	4	10-24 x 3/4 Machine Bolt
4	1	599-100-100	1	Right Hoop Brace
4	2	599-100-101	1	Left Hoop Brace
4	3	599-100-102	1	Right Hoop Post
4	4	599-100-103	1	Left Hoop Post
4	5	599-100-104	2	Switch Adjuster Screw
4	6	599-100-105	1	Automatic Control Panel Mount
4	7	599-100-106	1	Manual Control Mount
4	8	599-100-110	4	1/2 x 4 1/2 Bolt

Page #	Ref #	Part #	Qty	Description
5	1	599-100-022 R	1	Right Side Safety Door Bracket
5	2	599-100-024 R	1	Right Safety Door
5	3	500-100-041	1	Rubber Latch
5	4	500-100-040	1	Pin
5	5	500-100-042	1	Cotter Pin
5	6	500-100-119	3	3/8 x 1 1/4 Bolt
5	7	550-100-026	3	3/8 Locknut
5	8	550-100-027	1	Door Stay
6	1	599-100-023 L	1	Left Side Safety Door Bracket
6	2	599-100-025 L	1	Left Safety Door
6	3	500-100-041	1	Rubber Latch
6	4	500-100-040	1	Pin
6	5	500-100-042	1	Cotter Pin
6	6	500-100-119	3	3/8 x 1 1/4 Bolt
6	7	550-100-026	3	3/8 Locknut
6	8	550-100-027	1	Door Stay
6	9	500-100-176	1	3/8 x 1 Bolt
6	10	550-200-050	1	Hoop Lock Pin
7	1	500-100-049	1	Drive Wheel Base
7	2	500-100-050	1	Hydraulic Motor EATON Char-Lynn 101-1004
7	3	500-100-051	1	Motor Hub
7	4	500-100-052	1	Drive Wheel
7	5	500-100-053	4	1/2 x 3 UNF Bolt
7	6	500-100-054	4	1/2 Wheel Nut
7	7	500-100-055	2	5/8 x 1 1/2 Bolt
7	8	500-100-056	2	5/8 Locknut
7	9	500-100-057	4	3/8 x 3/4 Bolt
7	10	500-100-038	4	3/8 Lockwasher
7	11	500-100-059	1	Check Valve
7	12	500-100-060	1	Washer
7	13	500-100-061	1	1/4 x 1 Bolt & Lockwasher
7	14	500-101-222	1	Relief Valve (manual model only)
7	15	500-101-231	1	Wheel Tensioner Spring
7	16	500-101-232	1	Spring Tensioner Bolt
7	17	500-100-076	2	1/2 Nut
7	18	550-100-090	1	Base Bracket
7	19	599-100-031	4	3/8 x 1 1/2 Bolt

Page #	Ref #	Part #	Qty	Description
8	1	500-100-063	2	Inner Seal
8	2	500-100-064	2	Inner Bearing
8	3	500-100-065	2	Inner Bearing Race
8	4	500-100-066	2	Hub
8	5	500-100-067	2	Outer Bearing Race
8	6	500-100-068	2	Outer Bearing
8	7	500-100-069	2	Flatwasher
8	8	500-100-070	2	Castellated Nut
8	9	500-100-071	2	Cotter Pin
8	10	500-100-072	10	Wheel Stud
8	11	500-100-073	2	Dust Cap
8	12	550-200-001	2	Rear Spindle Assy
9	1	500-100-152	1	7/8 x 8 Bolt
9	2	500-100-153	1	7/8 Locknut
9	3	550-111-012	2	Bushing (1-1/8 x 7/8 x 1-1/2)
9	4	550-221-008	1	Tongue Bracket
9	5	550-111-006	2	Rod End R Thread
9	6	550-111-003	2	3/4 Jam Nut (NF RH)
9	7	550-221-001	2	Tie Rod
9	8	550-111-007	2	Rod End L Thread
9	9	550-111-002	2	3/4 Jam Nut (NF LH)
9	10	550-111-004	4	9/16 NF Slotted Hex Nut
9	11	550-111-005	4	1/8 x 1 Cotter Pin
9	12	550-111-011	2	Tongue Bracket Seal CR20952
9	13	550-111-010	2	Bearing Cone (13686)
9	14	550-111-009	2	Bearing Cup (13620)
9	15	550-221-013	1	Tongue Timkin Pin
9	16	550-111-014	3	13/16 Flat Washer
9	17	550-111-015	3	3/4 Slotted Hex Nut
9	18	550-111-016	3	3/16 x 2 Cotter Pin
9	19	550-100-080	4	Spindle Bearing Cone L44643
9	20	550-100-081	4	Spindle Bearing Cup L44610
9	21	550-100-082	4	Spindle Bearing Seal CR523696
9	22	550-100-083	1	Left Spindle
9	23	550-100-084	1	Right Spindle
9	24	550-100-085	2	Spindle Timkin Bolt
10	1	550-100-028	1	Brake Rocker Tube
10	2	550-100-029	2	Brake Eccentric
10	3	500-100-113	2	1/2 x 3 1/2 Bolt
10	4	500-100-075	2	1/2 Lockwasher
10	5	500-100-076	2	1/2 Nut
10	6	500-100-082	1	2 1/2 x 8 Hydraulic Cylinder

Page #	Ref #	Part #	Qty	Description
11	1	500-100-086	5	Large Roller
11	2	599-100-007	1	Riser Frame
11	3	550-100-050	2	Lock Pin
11	4	550-100-030	10	1" Bearing
11	5	599-100-031	20	3/8 x 1 1/2 Bolt
11	6	500-100-038	20	3/8 Lockwasher
11	7	500-100-190	20	3/8 Flatwasher
12	1	550-100-033	1	Tail Base
12	2	500-100-086	5	Large Roller
12	3	500-100-099	1	4" Roller
12	4	500-100-100	3	2 7/8" Roller
12	6	550-100-030	12	1" Bearing
12	7	599-100-103	1	3 x 12 Hydraulic Cylinder
12	8	599-100-035	1	Tail Tiebar
12	9	599-100-031	28	3/8 x 1 1/2 Bolt
12	11	550-100-037	4	5/16 x 1 1/2 Flathead Bolt
12	12	599-100-008	2	1 x 3 1/2 Bolt
12	13	599-100-009	2	1" Nylocknut
12	14	550-200-002	2	First Small Roller Bracket
12	15	550-200-003	2	2nd Small Roller Bracket
12	16	550-200-004	1	Last Right Roller Bracket
12	17	550-200-005	1	Last Left Roller Bracket
13	1	550-100-038 R	1	Bale Saddle Right Side
13	2	550-100-039 L	1	Bale Saddle Left Side
13	3	500-100-125	8	1/2 x 1 1/4 Bolt
13	4	500-100-114	4	1/2 Locknut
13	5	500-100-076	4	1/2 Nut
13	6	500-100-075	4	1/2 Lockwasher
14	1	599-100-040	1	Ram
14	2	550-100-041	2	Ram Guide
14	3	550-100-042	4	Cylinder Pin
14	4	550-100-043	2	Hydraulic Cylinder
14	5	550-100-044	2	3/4 x 2 Bolt
14	6	550-100-045	2	3/4 Lockwasher
14	7	550-100-046	2	3/4 Flatwasher
14	8	500-100-145	2	Grease Fitting
14	9	500-100-139	2	1/2 x 4 Bolt
14	10	500-100-076	2	1/2 Nut
14	11	500-100-075	2	1/2 Lockwasher
14	12	599-100-009	4	1/2 x 2 x 2 HMWPVC
14	13	599-100-010	4	Slider Retainer
14	14	599-100-011	8	1/4 x 1/2 Hex Socket Bolt

Page #	Ref #	Part #	Qty	Description
15	1	599-100-012	1	Push Off Left Front Arm
15	2	599-100-013	1	Push Off Right Front Arm
15	3	599-100-014	1	Push Off Left Rear Arm
15	4	599-100-015	1	Push Off right Rear Arm
15	5	599-100-016	1	Push Plate
15	6	599-100-017	2	X Bar
15	7	599-100-018	4	3/4 x 5 Hinge Bolt
15	8	599-100-019	4	3/4 Nylocknut
15	9	599-100-020	4	3/16 Linch Pin
16	1	599-100-047	1	Right Side Push Channel
16	1	599-100-048	1	Left Side Push Channel
16	2	550-100-048	1	Push Off Tube
16	4	550-100-050	3	Lock Pin
17	1	550-100-051	1	Main Tongue
17	2	550-100-052	1	Swinging Tongue
14	3	550-100-053	1	Sliding Tongue
17	4	500-100-151	1	Tongue Latch
17	5	500-100-154	1	Tongue Pin
17	6	500-100-155	2	5/8 x 5 Bolt
17	7	500-100-156	4	5/8 Locknut
17	8	500-100-157	2	5/8 x 4 1/2 Bolt
17	9	500-100-160	1	Tongue Holder
17	10	500-100-112	1	Hair Pin
17	11	500-100-103	1	2 x 16 Hydraulic Cylinder
18	1	550-100-054	2	Mud Flap
18	2	500-100-164	4	Metal Strip
18	3	500-100-165	12	5/16 x 1 Bolt
18	4	500-100-092	12	5/16 Lockwasher
18	5	500-100-093	12	5/16 Nut
19	1	500-100-168	1	Hydraulic Tank
19	2	500-100-169	1	Breather Cap
19	3	500-100-170	1	Filler Plug 1 1/4 Pipe
19	4	500-100-171	1	Sight Gauge
19	5	500-100-172	1	Filter Base
19	6	500-100-173	1	10 Micron Filter
19	7	500-100-174	1	Magnetic Drain Plug
19	8	500-100-175	1	Suction Filter
19	9	500-100-176	4	3/8 x 1 Bolt
19	10	500-100-038	4	3/8 Lockwasher
19	11	500-100-039	4	3/8 Nut

Page #	Ref #	Part #	Qty	Description
20	1	500-100-179	1	13 HP Honda Engine (rope start QA)
20	1	500-100-180	1	13 HP Honda Engine (electric start QNE)
20	2	500-100-181	1	Hydraulic Pump Prince # SP20A11A9HR
20	3	500-100-182	1	Engine - Pump Adapter
20	4	500-100-183	1	Love Joy Coupling Engine Side
20	5	500-100-184	1	Coupling Spacer
20	6	500-100-185	1	Love Joy Coupling Pump Side
20	7	500-100-176	4	3/8 x 1 Bolt
20	8	500-100-038	4	3/8 Lockwasher
20	9	500-100-188	2	3/8 x 1 1/4 Bolt
20	10	500-100-038	2	3/8 Lockwasher
20	11	500-100-190	2	3/8 Flatwasher
21	1	500-100-196	1	Engine Cover
21	2	500-100-197	1	Valve Stack Decal Plate
21	3	500-100-198	1	Selector Valve Decal Plate
21	4	500-100-199	1	Selector Valve Decal Plate Bracket
22	1	500-100-192	1	Prince # CPV0014
22	2	500-100-193	1	Flow Control Prince RD-150-08
22	3	500-100-194	1	12 Check Valve
22	4	500-100-195	1	Selector Valve
22	5	500-101-226	1	Relief Valve Prince RD18375
22	6	500-101-227	1	Ball Valve
23	1	500-100-200	2	Continental Tandem Center 12 VDC VS12MBLGB75L
23	2	500-100-201	1	Continental Single Center 12 VDC VS12M1AGB75L
23	3	500-100-193	1	Flow Control Prince RD-150-08
23	4	550-100-055	1	2 Spool Monoblock Valve c/w Power Beyond
23	5	550-100-056	1	Triple Manifold Block
23	6	550-200-006	1	Steering Speed Control (needle valve)
24		550-100-060		Limit Switch Assembly
24	1	550-100-057	1	Limit Switch Body
24	2	550-100-058	1	Limit Switch Actuator
24	3	550-100-059	2	Limit Switch Arm
24	4	550-100-059	2	Wire Clamp
24	5	599-100-049	2	Wire Arm
24	6	550-100-086	12	PVC Box Connector
25	1	550-100-061	1	Control Panel

	Ref #	Part #	Qty	Description
26	1	500-100-208	1	Trigger Plate
26	2	550-100-062	1	Trigger Spring
26	3	500-100-210	2	1/4 x 1 Stove Bolt c/w Nut & Lockwasher
26	4	500-100-211	1	Battery Holdown
26	5	500-100-212	2	5/16 x 7 Bolt c/w Nut & Lockwasher
27	1	599-100-063	1	Main Throttle Arm
27	2	599-100-064	1	Adjusting Bolt
27	3	550-100-069	1	Throttle Spring
27	4	599-100-065	3	Arm Bracket
27	5	550-100-067	3	Ball Joint
27	6	599-100-066	1	1/4 x 5 bolt c/w nut
27	7	550-100-065	3	Link Pivot
27	8	599-100-067	1	Engine Bracket
27	9	599-100-068	1	Rocker Bar
27	10	599-100-069	1	1/4 x 4 UNF Threaded Rod c/w 2 nut
27	11	500-100-165	6	5/16 x 1 Bolt
27	12	500-100-093	9	5/16 Nut
27	13	500-100-092	9	5/16 Lockwasher
27	14	599-100-070	3	5/16 x 1 1/2 Bolt
27	15	500-100-114	1	1/2 Locknut